GDM-20SE1

SERVICE MANUAL

REVISED

Multiscan20*se*

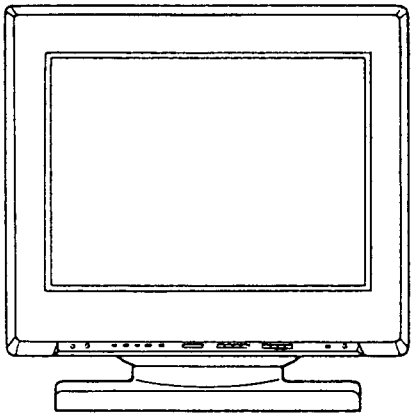

U/C Model
Chassis No. SCC-G28X-A
AUS Model
Chassis No. SCC-G30F-A
ES Model
GA Model
Chassis No. SCC-G28X-A

N-1 CHASSIS

SPECIFICATIONS

Picture tube	0.30 mm aperture grill pitch 20 inches measured diagonally (19" visual) 90° - degree deflection
Effective picture size	Approx. 388 × 292 mm (w/h) (15 × 11 1/2 inches)
Resolution	Horizontal : Max. 1280 dots Vertical : Max. 1024 lines
Display picture size	Approx. 350 × 280 mm (w/h) (13 7/8 × 11 1/8 inches) or Approx. 373 × 280 mm (w/h) (14 3/4 × 11 1/8 inches)
Deflection frequency	Horizontal: 31.5 to 85 kHz Vertical : 50 to 150 Hz
AC input voltage/current	100 to 120 V, 50/60 Hz, Max. 3.0 A 220 to 240 V, 50/60 Hz, 1.8 A
Dimensions	474 × 474 × 501.5 mm (w/h/d) (18 3/4 × 18 3/4 × 19 3/4 inches)
Mass	Approx. 30 kg (66 lb 2 oz)

Design and specifications are subject to change without notice.

TRINITRON®
COLOR GRAPHIC DISPLAY
SONY®

MICROFILM

SAFETY CHECK-OUT
(US Model only)

After correcting the original service problem, perform the following safety checks before releasing the set to the customer:

1. Check the area of your repair for unsoldered or poorly-soldered connections. Check the entire board surface for solder splashes and bridges.
2. Check the interboard wiring to ensure that no wires are "pinched" or contact high-wattage resistors.
3. Check that all control knobs, shields, covers, ground straps, and mounting hardware have been replaced. Be absolutely certain that you have replaced all the insulators.
4. Look for unauthorized replacement parts, particularly transistors, that were installed during a previous repair. Point them out to the customer and recommend their replacement.
5. Look for parts which, though functioning, show obvious signs of deterioration. Point them out to the customer and recommend their replacement.
6. Check the line cords for cracks and abrasion. Recommend the replacement of any such line cord to the customer.
7. Check the B+ and HV to see if they are specified values. Make sure your instruments are accurate; be suspicious of your HV meter if sets always have low HV.
8. Check the antenna terminals, metal trim, "metallized" knobs, screws, and all other exposed metal parts for AC Leakage. Check leakage as described below.

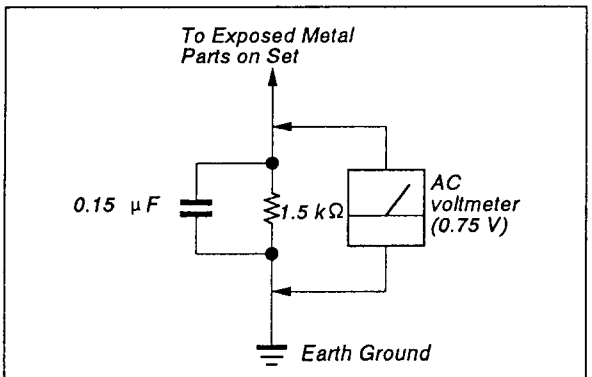

Fig. A. Using an AC voltmeter to check AC leakage.

LEAKAGE TEST

The AC leakage from any exposed metal part to earth ground and from all exposed metal parts to any exposed metal part having a return to chassis, must not exceed 0.5 mA (500 microampers). Leakage current can be measured by any one of three methods.

1. A commercial leakage tester, such as the Simpson 229 or RCA WT-540A. Follow the manufacturers' instructions to use these instruments.
2. A battery-operated AC milliammeter. The Data Precision 245 digital multimeter is suitable for this job.
3. Measuring the voltage drop across a resistor by means of a VOM or battery-operated AC voltmeter. The "limit" indication is 0.75 V, so analog meters must have an accurate low-voltage scale. The Simpson 250 and Sanwa SH-63Trd are examples of a passive VOMs that are suitable. Nearly all battery operated digital multimeters that have a 2 V AC range are suitable. (See Fig. A)

WARNING!!

NEVER TURN ON THE POWER IN A CONDITION IN WHICH THE DEGAUSS COIL HAS BEEN REMOVED.

SAFETY-RELATED COMPONENT WARNING!!

COMPONENTS IDENTIFIED BY SHADING AND MARK ⚠ ON THE SCHEMATIC DIAGRAMS, EXPLODED VIEWS AND IN THE PARTS LIST ARE CRITICAL FOR SAFE OPERATION. REPLACE THESE COMPONENTS WITH SONY PARTS WHOSE PART NUMBERS APPEAR AS SHOWN IN THIS MANUAL OR IN SUPPLEMENTS PUBLISHED BY SONY. CIRCUIT ADJUSTMENTS THAT ARE CRITICAL FOR SAFE OPERATION ARE IDENTIFIED IN THIS MANUAL. FOLLOW THESE PROCEDURES WHENEVER CRITICAL COMPONENTS ARE REPLACED OR IMPROPER OPERATION IS SUSPECTED.

AVERTISSEMENT!!

NE JAMAIS METTRE SOUS TENSION QUAND LA BOBINE DE DEMAGNETISATION EST ENLEVEE.

ATTENTION AUX COMPOSANTS RELATIFS À LA SÉCURITÉ!!

LES COMPOSANTS IDENTIFIÈS PAR UNE TRAME ET PAR UNE MARQUE ⚠ SUR LES SCHÉMAS DE PRINCIPE, LES VUES EXPLOSÉES ET LES LISTES DE PIECES SONT D'UNE IMPORTANCE CRITIQUE POUR LA SÉCURITÉ DU FONCTIONNEMENT. NE LES REMPLACER QUE PAR DES COMPOSANTS SONY DONT LE NUMÉRO DE PIÉCE EST INDIQUÉ DANS LE PRÉSENT MANUEL OU DANS DES SUPPLÉMENTS PUBLIÉS PAR SONY. LES RÉGLAGES DE CIRCUIT DONT L'IMPORTANCE EST CRITIQUE POUR LA SÉCURITÉ DU FONCTIONNEMENT SONT IDENTIFIES DANS LE PRÉSENT MANUEL. SUIVRE CES PROCÉDURES LORS DE CHAQUE REMPLACEMENT DE COMPOSANTS CRITIQUES, OU LORSQU'UN MAUVAIS FONCTIONNEMENT EST SUSPECTÉ.

POWER SAVING FUNCTION

The unit supports the computers corresponding to the "Power Saving Function".

Power saving operation

- The H sync or V sync is not present.
  ↓
  The unit goes into suspend mode.
- Both the H sync and V sync are not present.
  ↓
  The unit goes into active-off mode.

Note

As this unit has the Power Saving Function, if you turn on the unit with no signal input, the unit goes into Power Saving mode and waits for an input signal.

CAUTION

Turn power off and disconnect the power cord when you will disassemble the unit since.

TIMING SPECIFICATION

Mode	1	2	3	4	5	6	7	8	9	10
Resolution (H x V)	624 x 468	720 x 400	768 x 576	800 x 600	992 x 744	992 x 744	1216 x 840	1280 x 1024	1280 x 1024	624 x 468
Dot Clock (MHz)	25.175	28.322	49.500	57.285	78.750	80.000	108.520	110.000	135.000	31.500
Horizontal										
Hor. freq. (kHz)	31.469	31.469	46.875	49.727	60.023	60.241	68.684	69.953	79.978	37.500
H-total	31.778	31.777	21.333	20.110	16.660	16.600	14.560	15.636	12.504	26.667
H-blanking	6.991	6.355	5.818	6.145	4.063	4.200	3.354	4.000	3.022	6.857
H-Front porch	0.953	0.636	0.646	0.838	0.406	0.750	0.516	0.727	0.119	0.762
H-Sync. width	3.813	3.813	1.616	1.117	1.219	1.200	1.290	1.018	1.067	2.032
H-Back porch	2.224	1.907	3.556	4.190	2.438	2.250	1.548	2.255	1.837	4.063
H-Active	24.786	25.422	15.515	13.965	12.597	12.400	11.205	11.636	9.481	19.810
(μsec)										
Vertical										
Ver. freq. (Hz)	59.940	70.087	75.000	74.553	75.029	74.927	75.064	59.938	75.025	75.000
V-total	525	449	625	667	800	804	915	1067	1066	500
V-blanking	57	49	49	67	56	60	75	43	42	32
V-Front porch	16	12	13	16	13	17	17	1	1	7
V-Sync. width	2	2	3	3	3	3	3	5	3	3
V-Back porch	39	35	33	48	40	40	55	37	38	22
V-Active	468	400	576	600	744	744	840	1024	1024	468
(Lines)										
Sync.	External	External	External	External	External	External	External	External	External	External
H-Polarity	(−)	(−)	(+)	(−)	(+)	(−)	(−)	(−)	(+)	(−)
V-Polarity	(−)	(+)	(+)	(−)	(+)	(−)	(−)	(−)	(+)	(−)
Scanning mode	Non-interlace	Non-interlace	Non-interlace	Non-interlace	Non-interlace	Non-interlace	Non-interlace	Non-interlace	Non-interlace	Non-interlace

TABLE OF CONTENTS

Section *Title* *Page*

1. DISASSEMBLY

1-1. Cabinet and EMI Shield Removal ····· 5
1-2. G Block Assy Removal ····· 5
1-3. A Block Assy Removal ····· 6
1-4. Connector Panel Assy Removal ····· 6
1-5. Chassis Assy Removal ····· 7
1-6. Front Block Assy Removal ····· 7
1-7. Bezel Assy Removal ····· 8
1-8. Picture Tube Removal ····· 8
1-9. Wiring Harness Layout ····· 9

2. SAFETY RELATED ADJUSTMENT ····· 10

3. ADJUSTMENTS ····· 10

4. TROUBLESHOOTING ····· 13

Section *Title* *Page*

5. DIAGRAMS

5-1. Block Diagrams ····· 14
5-2. Frame Schematic Diagram ····· 19
5-3. Circuit Boards Location ····· 21
5-4. Schematic Diagrams and Printed Wiring Boards
(1) Schematic Diagrams of D, F Boards ····· 25
(2) Schematic Diagram of A Board ····· 29
(3) Schematic Diagram of N Board ····· 39
(4) Schematic Diagrams of H, G and M Boards ····· 43
5-5. Semiconductors ····· 51

6. EXPLODED VIEWS

6-1. Chassis ····· 53
6-2. Picture Tube ····· 54
6-3. Kit ····· 55
6-4. Accessories and Packing Materials ····· 56

7. ELECTRICAL PARTS LIST ····· 57

Function of Controls

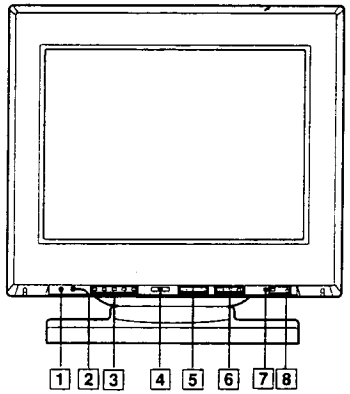

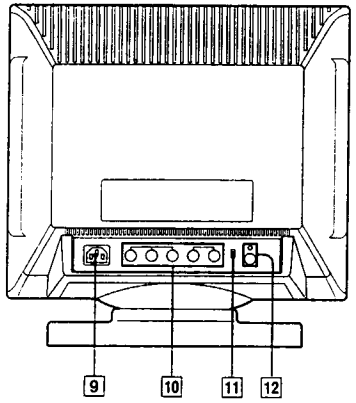

1 RESET button
Press to reset the adjustment data to the factory-preset levels for the input signal being received.

2 CTRL (control) button
To reset all the adjustment data to the factory-preset levels, press the RESET button 1 while holding down this button.

3 Indicator
The indicator corresponding to the item selected with the SELECT button 4 lights up.
CENT: Centering
SIZE: Picture size
GEOM: Picture tilt/Horizontal pincushion
CONV: Convergence
C TEMP: Color temperature

4 SELECT button
Press to select an item.
Hold down for more than one second until an indicator lights up, then press repeatedly to select an item 3.

5 ☼ (brightness) buttons
Press + or – to adjust the picture brightness.
When an item is selected, use these buttons to adjust the picture size and centering in the vertical direction and the picture tilt.

6 ◑ (contrast) buttons
Press + or – to adjust the picture contrast.
When an item is selected, use these buttons to adjust the picture size and centering in the horizontal direction, the horizontal pincushion and the colour temperature.

7 POWER SAVING indicator
Lights up when the monitor is in Power Saving Mode. Blinks when you reached the limit of the adjustable range or while in resetting mode.

8 ⏻ power switch and indicator
Press to turn the monitor on or off. The indicator lights up when the monitor is turned on. To disconnect the power supply, disconnect the AC power cord.

9 AC IN connector
Plug in an AC power cord.

10 Video input connector (5 BNC)
The connector accepts RGB video signals (0.714 Vp-p, positive).

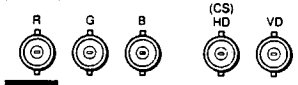

Note

If you use a computer or video board of high output level (about 1.0 Vp-p), you may not be able to obtain the optimum display. In such case, try decreasing the picture contrast, or use a computer or video board with a lower output level.

11 75 Ω/2 kΩ selector
Switches the impedance of the video input connector 10 termination to 75 Ω or to 2 kΩ.
(Default setting is 2 kΩ)

12 SERVICE button and terminal
The button and the terminal are to be used by service personnel only.

SECTION 1
DISASSEMBLY

1-1. CABINET AND EMI SHIELD REMOVAL

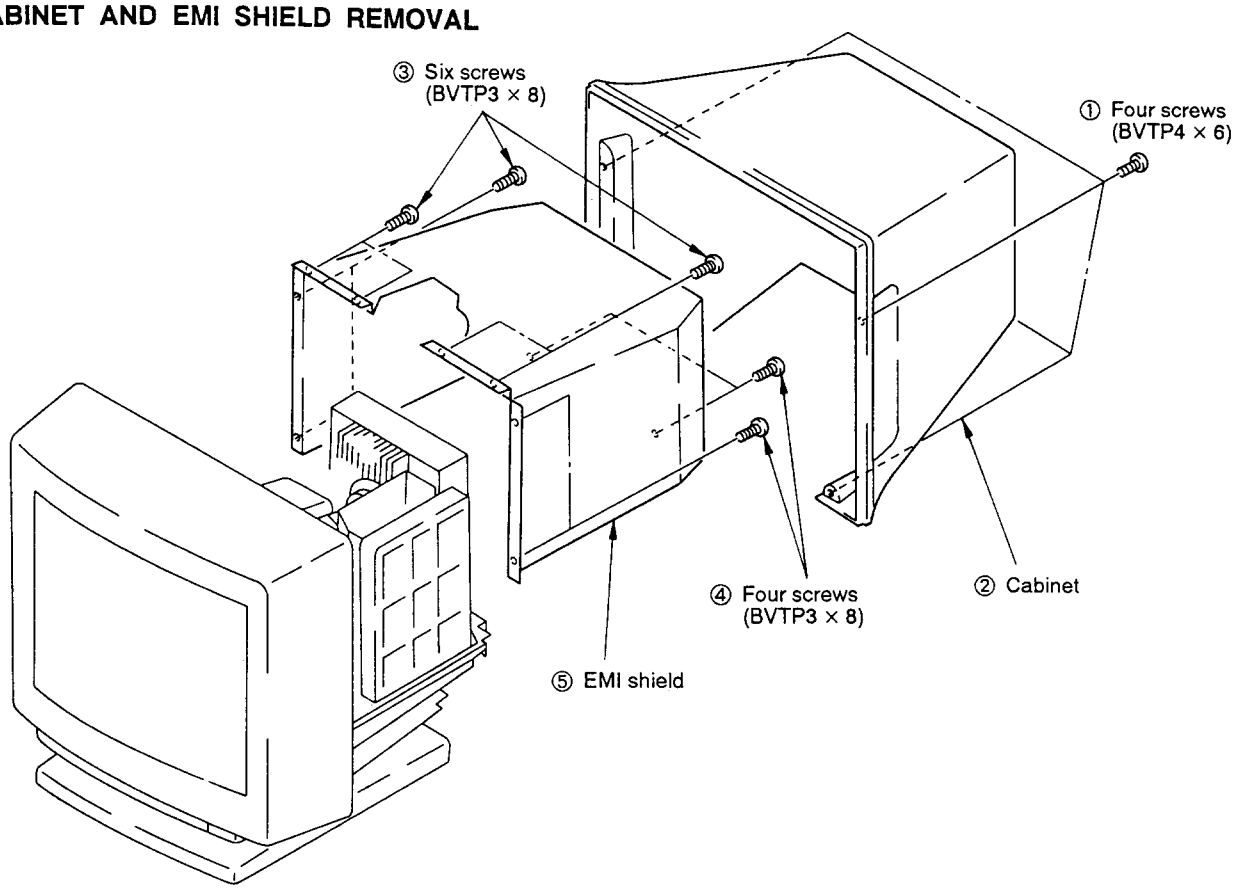

1-2. G BLOCK ASSY REMOVAL

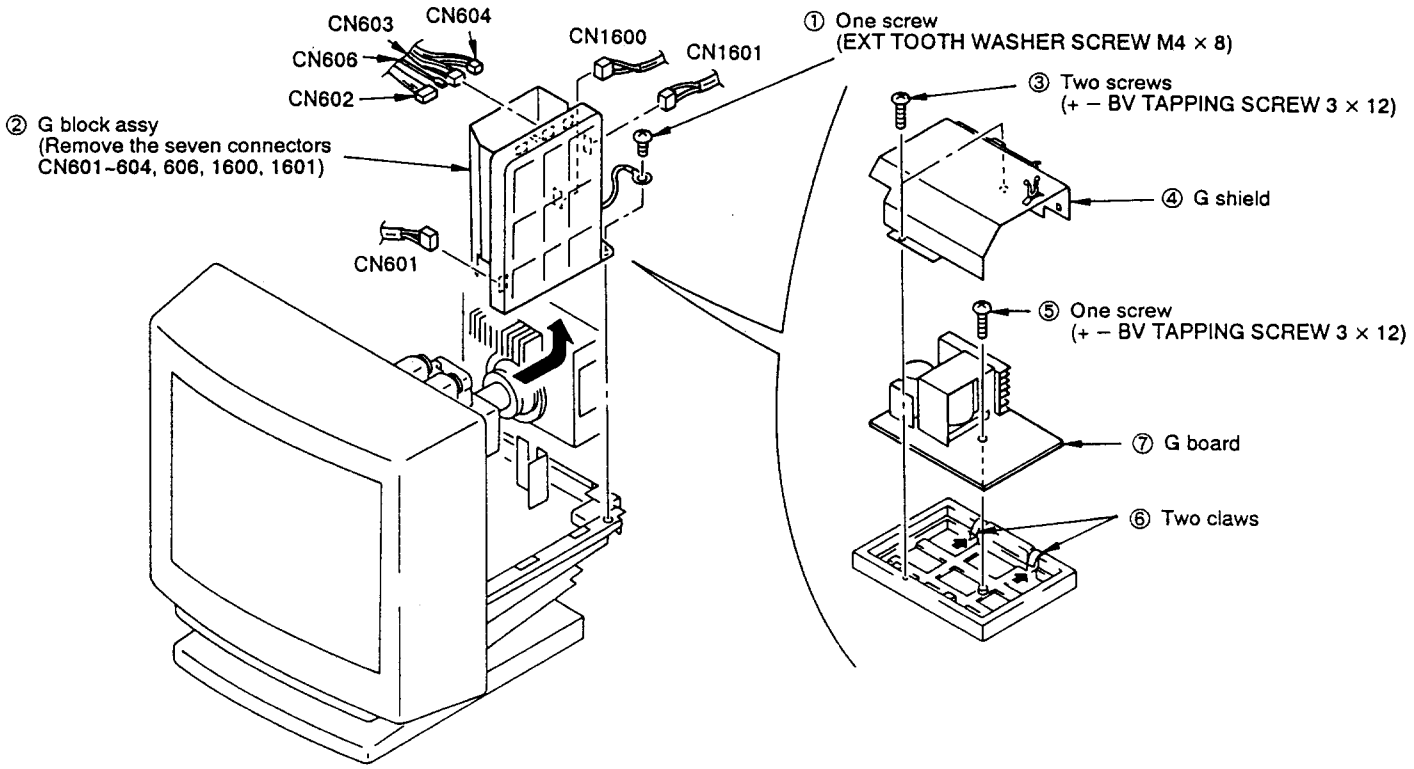

1-3. A BLOCK ASSY REMOVAL

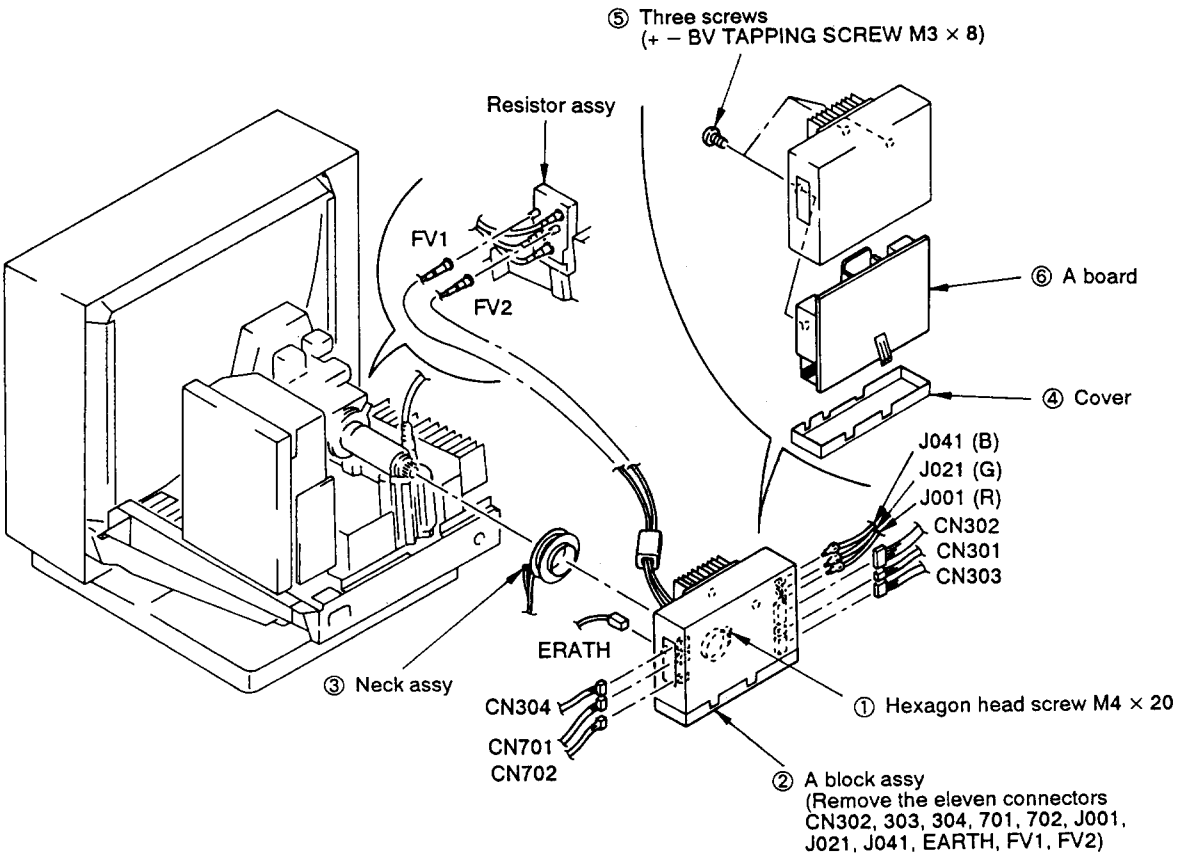

1-4. CONNECTOR PANEL ASSY REMOVAL

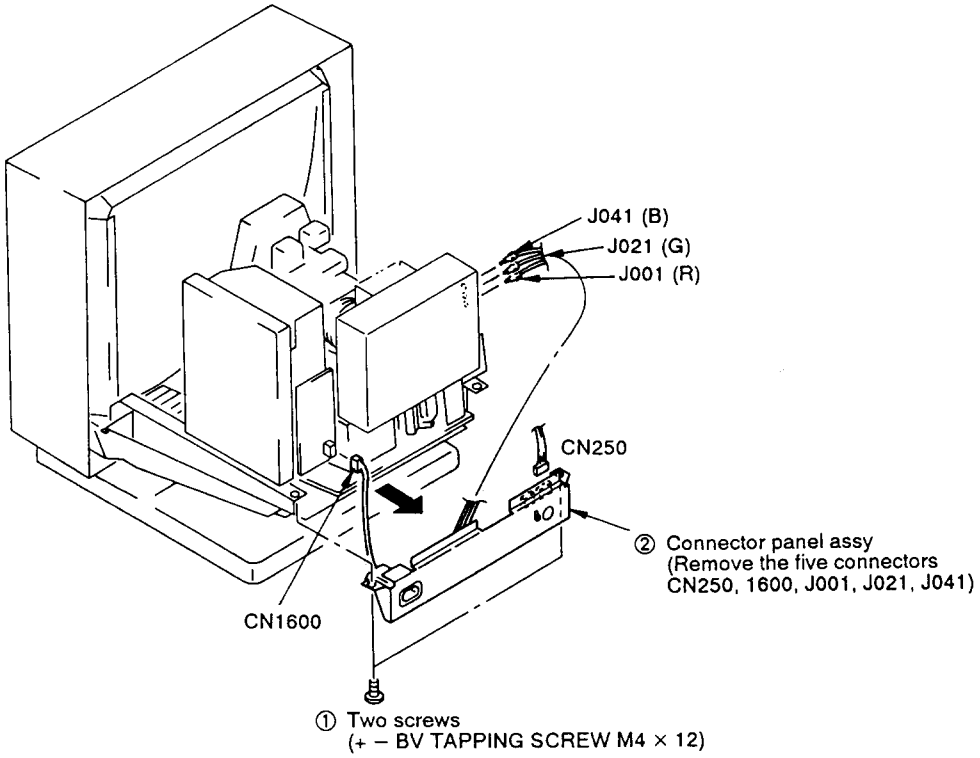

1-5. CHASSIS ASSY REMOVAL

※ Remove the G block assy, A block assy and connector panel assy (See 1-2, 1-3, 1-4)

③ Chassis assy (Remove the four connectors CN H, 400, 501, DGC)

① Two screws (BVTP 4 × 16)

CN501

CN400

② Anode cap

H

DGC

④ Three screws (+ – BV TAAPPING screw 3 × 12)

CN401

N board

⑥ D board (Remove the three connectors CN401, MV, ERATH)

MV

EARTH

⑤ Two claws

1-6. FRONT BLOCK ASSY REMOVAL

※ Remove the chassis assy (See 1-5)

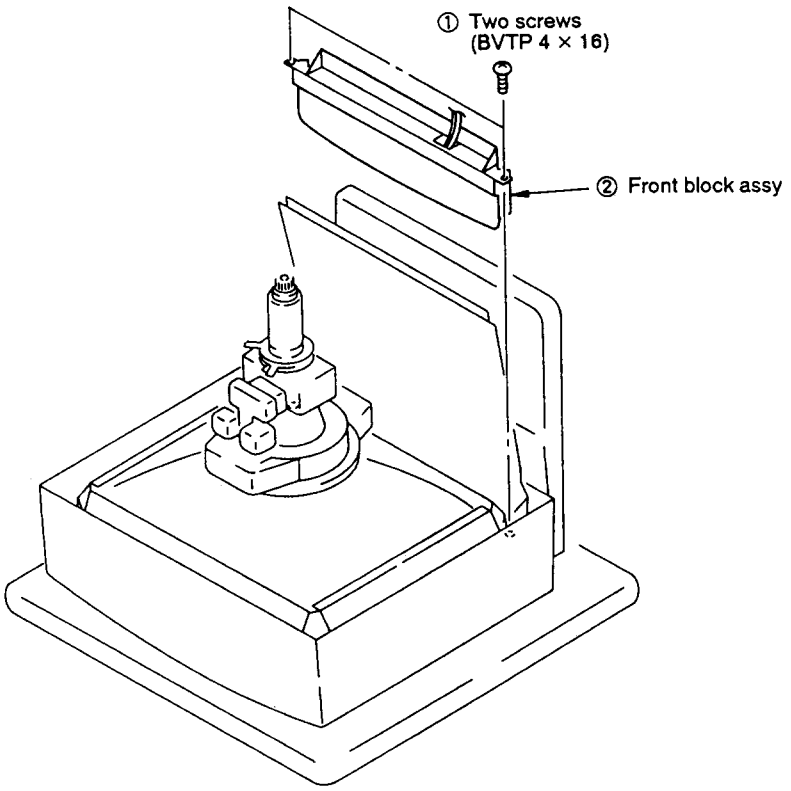

1-7. BEZEL ASSY REMOVAL

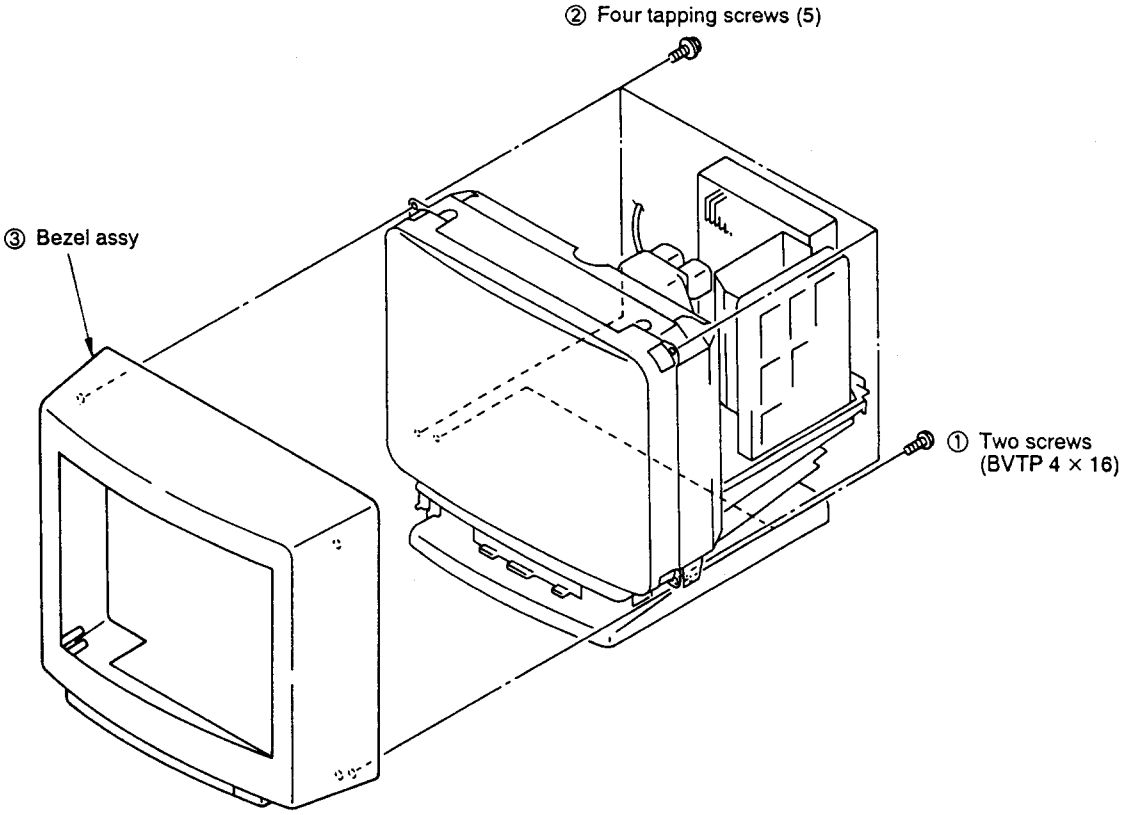

1-8. PICTURE TUBE REMOVAL

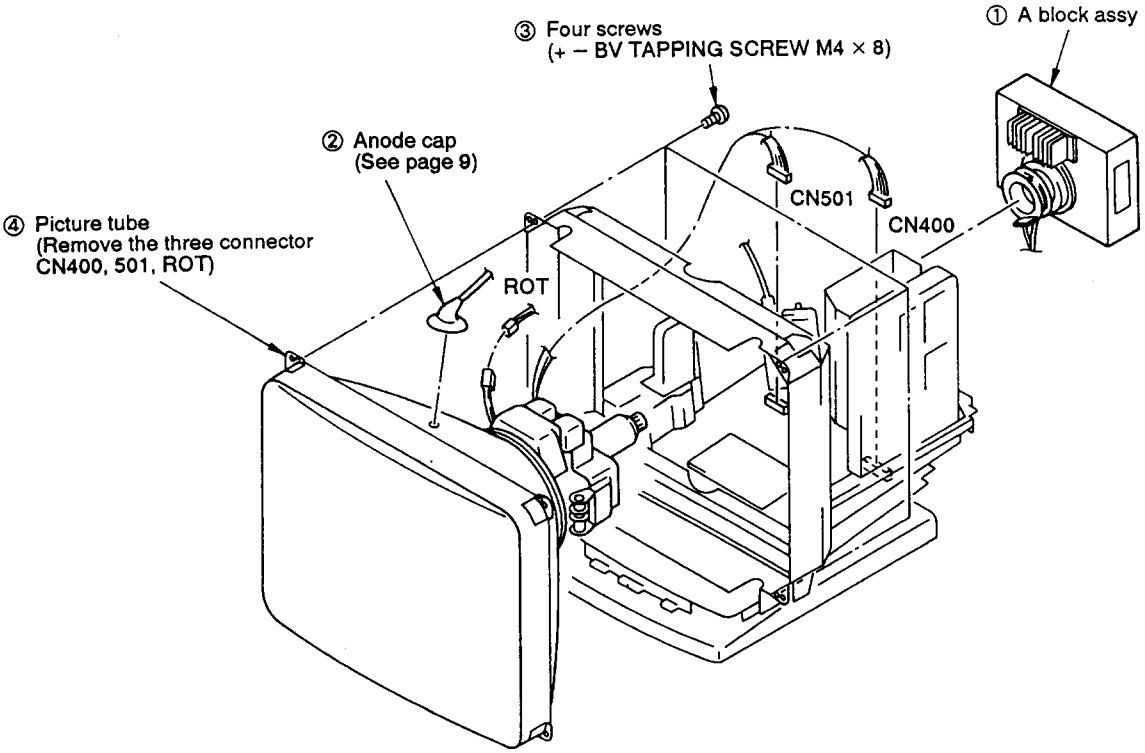

1-9. WIRING HARNESS LAYOUT

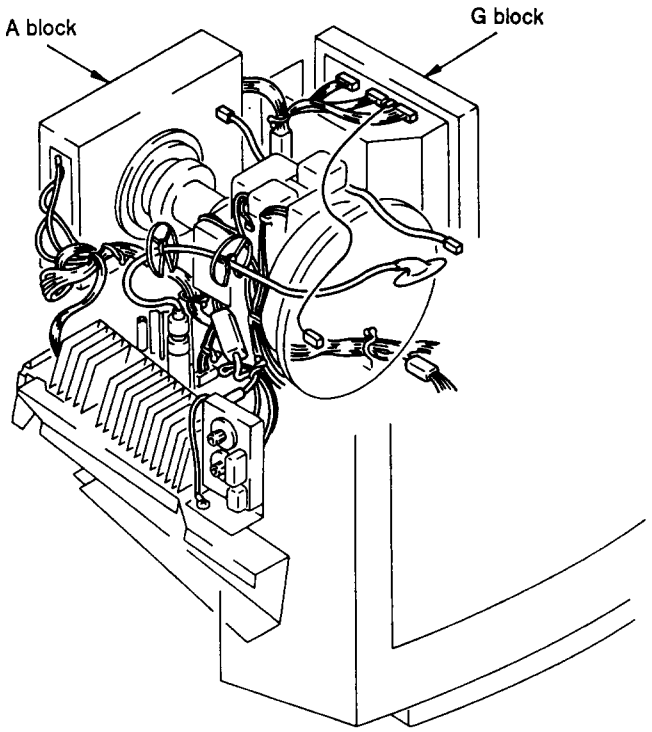

- **REMOVAL OF ANODE-CAP**

Note: Short circuit the anode of the picture tube and the anode cap to the metal chassis, CRT shield, or carbon painted on the CRT, after removing the anode.

- **REMOVING PROCEDURES**

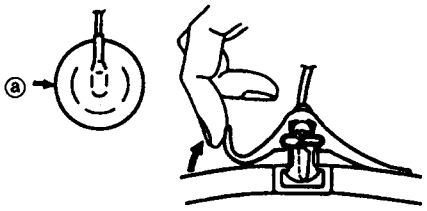

① Turn up one side of the rubber cap in the direction indicated by the arrow ⓐ.

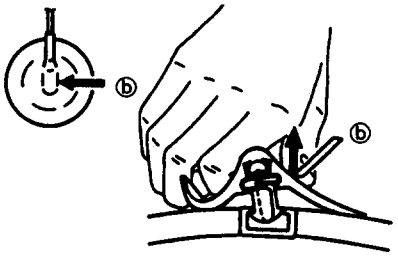

② Using a thumb pull up the rubber cap firmly in the direction indicated by the arrow ⓑ.

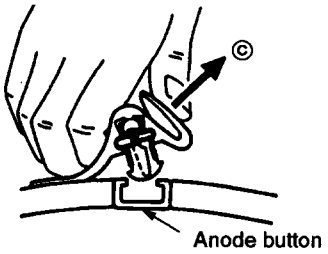

③ When one side of the rubber cap is separated from the anode button, the anode-cap can be removed by turning up the rubber cap and pulling up it in the direction of the arrow ⓒ.

- **HOW TO HANDLE AN ANODE-CAP**

① Don't hurt the surface of anode-caps with sharp shaped material !
② Don't press the rubber hardly not to hurt inside of anode-caps !
A metal fitting called as shatter-hook terminal is built in the rubber.
③ Don't turn the foot of rubber over hardly ! The shatter-hook terminal will stick out or hurt the rubber.

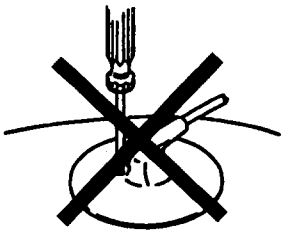

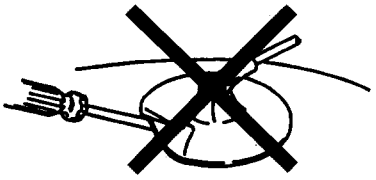

SECTION 2
SAFETY RELATED ADJUSTMENT

When replacing or repairing the shown below table, the following operational checks must be performed as a safety precaution against X-rays emissions from the unit.

HV Regulator Circuit Check	D board------ IC804, T800 • Mounted D board
HV. Hold-Down Circuit Check	D board------ IC804, R826, R832, R842, R843, T800 • Mounted D board
Beam Current Protector Circuit Check	D board------ IC804, T800 • Mounted D board
B+ Regulator Circuit Check	G board------ IC602, IC603, R630 • Mounted G board • Power Supply Block
OVP Circuit Check	G board------ D620, R631, R633, R635, Q610 • Mounted G board • Power Supply Block

a) HV Regulator Check

1) Input a white dot signal and set the contrast and bright to the minimum level.

   check point
   pin ② of CN801, $9.00^{+0.06}_{-0.06}$ VDC

b) HV Hold-Down Check

1) Check if the raster disappears when the voltage less than 8.80 VDC is applied between pin ⑤ of CN801 and GND from the external power source.

c) Beam Protector-1 and Protector-2 Check

1) Record the initial value of ABL-SHUTDOWN, input the "255" for resistor value.
2) Reduce the resistance gradually from the maximum level using a variable resistor of more than 12 〔K-ohm〕 and an ampermeter connected in series between pin ① of CN801 and GND.
3) Check that the protector circuit operates to disappear the raster when the current level drops less than 1.36 mA.
4) Back the value of ABL-SHUTDOWN to the initial regulation value.

d) B+ Regulator Circuit Check

1) Input a white dot signal and set the contrast and bright to the minimum level.

   check point
   pin ① of CN602, 144.0 ± 3 VDC

SECTION 3
ADJUSTMENTS

Connect the communication cable of the computer (ex. PC-AT) to the connector located on the rear side of the monitor. Run the service software and then follow the instruction.

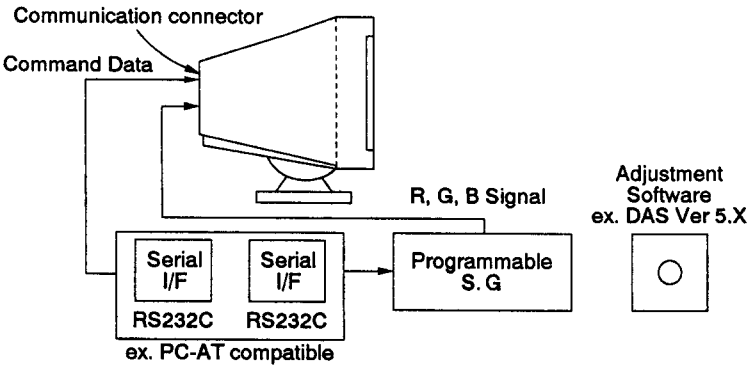

• White Balance Adjustment Methods (with HSI Function)

Adjustments Procedure	Input signal	Value of CONT, BRT	Adjust point
ADJUSTMENT BLU (9300K), Set control register #1 to 0. Input initial data			
1	Gray scale		G2
2	Black	CONT=0, BRT=255 Note 1 G CUT OFF MAX, G CUT OFF MIN	G. CUT OFF MAX, R. B CUT OFF MAX
3	Full white pattern	CONT =255, BRT=80	G DRV
4	COPY G DRV data to R DRV and B DRV		
5	Full white pattern	CONT=255, BRT=255	R DRV, B DRV
6		Confirm luminance	Incase of difference readjust CONT MAX/BRT MAX
7	Gray (30IRE)	CONT=255, BRT=80	R, B CUT MIN
8	Full white pattern	CONT=255, BRT=80	R, B DRV Note 2
9	Full white pattern	CONT=255, BRT=255	CONT MAX/BRT MAX
10	Full white pattern	CONT=255, BRT=80	CONT MAX/BRT MIN
11	Full white pattern	CONT=0, BRT=255	CONT MIN/BRT MAX
12	Full white pattern	CONT=0, BRT=80	CONT MIN/BRT MIN
13		CONT=255, BRT=80	Color save and Service save
Copy BLU data to RED, set color NDX=1			
1	Black pattern	CONT=0, BRT=255	R, B CUT OFF MAX
2	White pattern	CONT=255, BRT=255	G DRV, B DRV
3	Gray (30IRE)	CONT=255, BRT=80	R, B CUT MIN
4	Full white pattern	CONT=255, BRT=80	G, B DRV Note 3
5			Color save
Copy BLU data to GRN, set color NDX=2			
1	Black pattern	CONT=0, BRT=255	R, B CUT OFF MAX
2	White pattern	CONT=255, BRT=255	R DRV, B DRV
3	Gray (30IRE)	CONT=255, BRT=80	R, B CUT MIN
4	Full white pattern	CONT=255, BRT=80	R, B DRV Note 3
5			Color save
Copy BLU data to WHT, Set color NDX=0			
1	Black pattern	CONT=0, BRT=255	R, B CUT OFF MAX
2	White pattern	CONT=255, BRT=255	G DRV, B DRV
3	Gray (30IRE)	CONT=255, BRT=80	R, B CUT MIN
4	Full white pattern	CONT=255, BRT=80	G, B DRV Note 3
5		CONT=255, BRT=80	Color save
Set color NDX=0			
	Gray scale	CONT=255, BRT=80	G2 should only be readjusted if the back ground raster is visible
Set color NDX=1			
			Service save
Set color NDX=0, (6500 K)		Hue=0, Sat=0	
Set color NDX=1, (9300 K)		Hue=168, Sat=255	Hue, Sat
Set color NDX=2, (6500 K)		Hue=0, Sat=0	
Set color NDX=3, (5000 K)			Hue, Sat
Set control register #2 to 234			
			Color save

Note 1: $\frac{110 \times 255 - 80 \times (\text{G. CUT MAX value})}{175}$

Note 2: Return to 7 for Tracking.
Note 3: Return to 3 for Tracking.

• Geometry Adjustment Methods

1. Adjustment at Minimum Horizontal and Vertical Frequencies
   (1) V-SYNCHRONIZATION
   (2) VERTICAL SIZE AND CENTER
   (3) V-LINEARITY
   (4) COMPENSATION V-LINEARITY VS V-CENT
   (5) H-LINEARITY
   (6) GEOMETRY DISTORTION
   (7) COMPENSATION PIN VS H-SIZE
   (8) COMPENSATION H-SIZE & PIN VS V-SIZE
   (9) COMPENSATION H-SIZE VS V-CENT
2. Adjustment at Maximum Horizontal and Vertical Frequency
   (1) V-LINEARITY
   (2) COMPENSATION V-LINEARITY VS V-CENTER
   (3) H-LINEARITY
   (4) GEOMETRY
3. Adjustment at Middle Frequency
4. Adjustment H-SIZE MAX, V-SIZE MAX and V-SIZE MIN
5. Adjustment at Factory preset

- **Vertical and Horizontal Position and Size Specification**

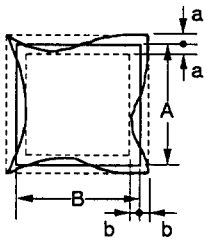

a < 2.8 mm
b < 2.8 mm

mode	A	B
16 × 12	360	270
20 × 16	350	280

- **Convergence Specification**

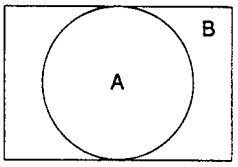

A ≦ 0.24 mm
B ≦ 0.32 mm

A ≦ 0.28 mm (AUS Model)
B ≦ 0.36 mm (AUS Model)

- **CONVERGENCE ROUGH ADJUSTMENT**

(1) Receive an image of the white crosshatch signals.
(2) Place the protrusions of the 6-fold poles magnet attached to the CRT neck upon each other (See figure).
(3) Make rough adjustment of the H direction convergence by using H. STAT VR (right side of the video case).
(4) Make a rough adjustment of the V direction convergence by using "V. STAT".

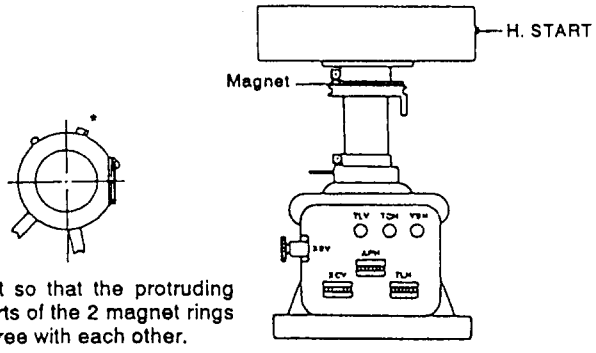

* Set so that the protruding parts of the 2 magnet rings agree with each other.

Fig. 1

- **CONVERGENCE FINE ADJUSTMENT**

(1) Input white crosshatch signals (white lines on black) in the prime mode. (mode 7)
Adjust the screen size to 360 × 270.
(2) Confirm that the values of "H. CONV" and "V. CONV" are "0" (center).
(3) Turn the magnet ring (6-fold poles) behind DY and correct to zero. (See figure.)
(4) Turn the H. STAT VR and set the parallel lines of the 3 colors R, G and B (vertical lines). Set the parallel lines of the 3 colors R, G and B with "V. CONV" (horizontal lines).
(5) Turn the magnet ring (6-fold poles) behind the neck assembly and adjust so that the R-G distance of the parallel lines of the 3 colors and the B-G distance become identical.
(6) Return the value of H. STAT VR and "V. CONV" used in (3) and set the misconvergence of the center of the screen to zero.
(7) Fine adjustment of convergence
a) Set "V. CONV TOP" and "V. CONV BOT" to zero.
b) Turn the XBV reactor and adjust the XBV misconvergence.
(The reactor on the far left side of the upper circuit board when seen from the CRT side.)
c) Turn the XCV reactor and adjust the XCV misconvergence.
(The reactor on the near left side of the upper circuit board when seen from the side.)

Note: When adjusting XBV, the "V. CONV" shall be reajusted.
When XCV exceeds the adjustment range, oscillate the upper and lower parts of DY and adjust.

d) Turn the APH reactor and adjust th H. AMP misconvergence.
(The near center reactor of the upper circuit board when see from the CRT tube side.)
e) Turn the TLH reactor and adjust the H. TILT misconvergence.
(The near right side reactor of the upper circuit board when seen from the CRT tube side.)
(Note: Readjust H. STAT VR too.)
f) Adjust the YBH misconvergence with the VR YBH on the DY.
(The far right side VR when seen from the CRT tube side.)
g) Adjust the YCH misconvergence with the VR YCH on DY.
(The far center VR when seen from the CRT tube side.)
h) Adjust "V. CONV BOT".
i) Adjust "V. CONV TOP".
j) Adjust the upper and lower TLV with VR TLV on DY as necessity required.
(The far left side VR when seen from the CRT tube side.)
(Note: When the horizontal trapezoid does not agree with the specification, carry out left and right oscillation and tracking of DY.)
k) Confirm the convergence of the whole screen, and carry out H. STAT correction and the operations of c) – k), and Permalloy correction.
l) Confirm the convergence of the whole screen.
m) Switch the mode between the prime mode and the convergence check mode (mode 7), and confirm the convergence in each mode after having carried out fine adjustment with H. STAT and V. STAT on the front panel.
n) Fix the 2 places of the XBV, XCV, APH and TCH reactors and the 6-fold poles with a white pen.
o) Fix the DV spacer (large) and the Permalloy with RTV.

SECTION 4
TROUBLESHOOTING

This diagnostic troubleshooting guide uses the monitor symptom as a clue for selecting a repair procedure. Select the listed symptom closest to that of your monitor and follow the procedure given for that symptom in this troubleshooting guide. If the same trouble recurs even after you have changed a block or part, re-install the original block or part, then proceed to the next step.

Symptoms	Repair Procedure
• No Power	1. Check whether the internal power supply connector is connected. 2. Inspect the power supply fuse. → If it has blown, change it. If it blows again, proceed to the next step. 3. Change the Power block. 4. Change the D board block.
• Sametime shutdown after work while	1. Check the hold down voltage. 2. Change the hight voltage capacitor. C805 3. Change the D board block.
• Abnormal coil demagnetization	1. Change the Power block.
• No Picture	1. Adjust the CONTRAST control. 2. Confirm the input signal. 3. Confirm connector between power block and D board. 4. Inspect the power supply fuse. → If it has blown, change it. If it blows again, proceed to the next step. 5. Change the Power block. 6. Change the D board block. 7. Change the A board. 8. Change the U board. 9. Change the CRT.
• Display area too small/large/short/tall/ narrow/wide	1. Adjust the horizontal or vertical size. 2. Change the D board block.
• Horizontal distortion	1. Re-adjust using the service software. 2. Change the D board block.
• Vertical distortion	1. Re-adjust using the service software. 2. Change the D board block.
• Picture tilted	1. Make the tilt adjustment.
• Picture flickers	1. Check the fastening of the ground line. 2. Check the grounding of the connected computer. 3. Change the D board Block.
• Brightness can not be adjusted	1. Change the A board. 2. Change the H board.
• Contrast can not be adjusted	1. Change the A board. 2. Change the H board.
• Picture too bright/dark	1. Adjust the BRIGHTNESS control. 2. Adjust the white balance. 3. Adjust the CONTRAST and BRIGHT controls. 4. Change the A board. 5. Change the Power block. 6. Change the CRT.

For picture size, pictuer distortion, and other specifications, place the ball chart on the set and check and adjust.

GDM-20E01/20E01T

SERVICE MANUAL

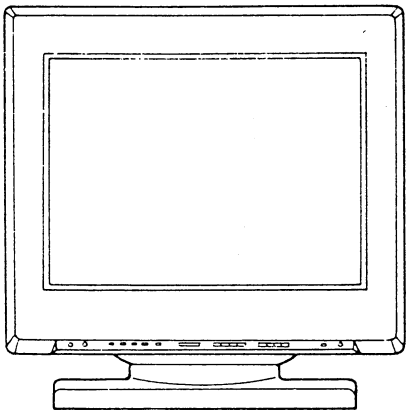

GDM-20E01
US Model
Canadian Model
Chassis No. SCC-G96A-A
AEP Model
Chassis No. SCC-G24C-A
GDM-20E01T
AEP Model
Chassis No. SCC-G24M-A

N-1 CHASSIS

SPECIFICATIONS

Picture tube	0.31 mm phosphor trio pitch 20 inches measured diagonally (19" visual) 90° - degree deflection
Effective picture size	Approx. 388 × 292 mm (w/h) (15 × 11 1/2 inches)
Resolution	Horizontal : Max. 1280 dots Vertical : Max. 1024 lines
Display picture size	Approx. 350 × 280 mm (w/h) (13 7/8 × 11 1/8 inches) or Approx. 360 × 270 mm (w/h) (14 1/4 × 10 3/4 inches)
Deflection frequency	Horizontal : 29 to 82 kHz Vertical : 50 to 150 Hz
AC input voltage/current	100 to 120 V, 50/60 Hz, Max. 3.0 A 220 to 240 V, 50/60 Hz, 1.8 A
Dimensions	474 × 474 × 501.5 mm (w/h/d) (18 3/4 × 18 3/4 × 19 3/4 inches)
Mass	Approx. 30 kg (66 lb 2 oz)

Design and specifications are subject to change without notice.

MULTI-SCAN®
COLOR GRAPHIC DISPLAY
SONY®

MICROFILM

SAFETY CHECK-OUT
(US Model only)

After correcting the original service problem, perform the following safety checks before releasing the set to the customer:

1. Check the area of your repair for unsoldered or poorly-soldered connections. Check the entire board surface for solder splashes and bridges.
2. Check the interboard wiring to ensure that no wires are "pinched" or contact high-wattage resistors.
3. Check that all control knobs, shields, covers, ground straps, and mounting hardware have been replaced. Be absolutely certain that you have replaced all the insulators.
4. Look for unauthorized replacement parts, particularly transistors, that were installed during a previous repair. Point them out to the customer and recommend their replacement.
5. Look for parts which, through functioning, show obvious signs of deterioration. Point them out to the customer and recommend their replacement.
6. Check the line cords for cracks and abrasion. Recommend the replacement of any such line cord to the customer.
7. Check the B+ and HV to see if they are specified values. Make sure your instruments are accurate; be suspicious of your HV meter if sets always have low HV.
8. Check the antenna terminals, metal trim, "metallized" knobs, screws, and all other exposed metal parts for AC leakage. Check leakage as described below.

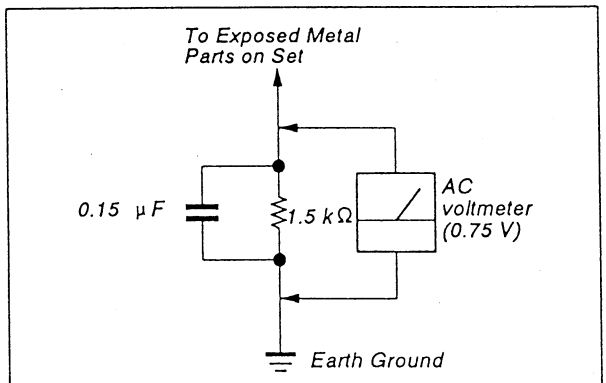

Fig. A. Using an AC voltmeter to check AC leakage.

LEAKAGE TEST

The AC leakage from any exposed metal part to earth ground and from all exposed metal parts to any exposed metal part having a return to chassis, must not exceed 0.5 mA (500 microampers). Leakage current can be measured by any one of three methods.

1. A commercial leakage tester, such as the Simpson 229 or RCA WT-540A. Follow the manufacturers' instructions to use these instruments.
2. A battery-operated AC milliammeter. The Data Precision 245 digital multimeter is suitable for this job.
3. Measuring the voltage drop across a resistor by means of a VOM or battery-operated AC voltmeter. The "limit" indication is 0.75 V, so analog meters must have an accurate low-voltage scale. The Simpson 250 and Sanwa SH-63Trd are examples of a passive VOMs that are suitable. Nearly all battery operated digital multimeters that have a 2 V AC range are suitable. (See Fig. A)

WARNING!!

NEVER TURN ON THE POWER IN A CONDITION IN WHICH THE DEGAUSS COIL HAS BEEN REMOVED.

SAFETY-RELATED COMPONENT WARNING!!

COMPONENTS IDENTIFIED BY SHADING AND MARK ⚠ ON THE SCHEMATIC DIAGRAMS, EXPLODED VIEWS AND IN THE PARTS LIST ARE CRITICAL FOR SAFE OPERATION. REPLACE THESE COMPONENTS WITH SONY PARTS WHOSE PART NUMBERS APPEAR AS SHOWN IN THIS MANUAL OR IN SUPPLEMENTS PUBLISHED BY SONY. CIRCUIT ADJUSTMENTS THAT ARE CRITICAL FOR SAFE OPERATION ARE IDENTIFIED IN THIS MANUAL. FOLLOW THESE PROCEDURES WHENEVER CRITICAL COMPONENTS ARE REPLACED OR IMPROPER OPERATION IS SUSPECTED.

AVERTISSEMENT!!

NE JAMAIS METTRE SOUS TENSION QUAND LA BOBINE DE DEMAGNETISATION EST ENLEVEE.

ATTENTION AUX COMPOSANTS RELATIFS À LA SÉCURITÉ!!

LES COMPOSANTS IDENTIFIÈS PAR UNE TRAME ET PAR UNE MARQUE ⚠ SUR LES SCHÉMAS DE PRINCIPE, LES VUES EXPLOSÉES ET LES LISTES DE PIECES SONT D'UNE IMPORTANCE CRITIQUE POUR LA SÉCURITÉ DU FONCTIONNEMENT. NE LES REMPLACER QUE PAR DES COMPOSANTS SONY DONT LE NUMÉRO DE PIÉCE EST INDIQUÉ DANS LE PRÉSENT MANUEL OU DANS DES SUPPLÉMENTS PUBLIÉS PAR SONY. LES RÉGLAGES DE CIRCUIT DONT L'IMPORTANCE EST CRITIQUE POUR LA SÉCURITÉ DU FONCTIONNEMENT SONT IDENTIFIES DANS LE PRÉSENT MANUEL. SUIVRE CES PROCÉDURES LORS DE CHAQUE REMPLACEMENT DE COMPOSANTS CRITIQUES, OU LORSQU'UN MAUVAIS FONCTIONNEMENT EST SUSPECTÉ.

POWER SAVING FUNCTION

The unit supports the computers corresponding to the "Power Saving Function".

Power saving operation

- The H sync or V sync is not present.

  ↓

  The unit goes into suspend mode.

- Both the H sync and V sync are not present.

  ↓

  The unit goes into active-off mode.

Note

As this unit has the Power Saving Function, if you turn on the unit with no signal input, the unit goes into Power Saving mode and waits for an input signal.

CAUTION

Turn power off and disconnect the power cord when you will disassemble the unit since.

TIMING SPECIFICATION

Mode	1	2	3	4	5	6	7	8	9	10	11	12	13	14
Resolution (HxV)	720x400	640x480	800x600	832x624	1120x750	1024x768	1024x768	1152x900	1280x1024	1280x1024	1152x870	1152x900	1280x1024	1280x1024
Dot Clock (MHz)	28.322	31.500	50.000	57.283	78.430	75.000	78.750	92.940	108.180	108.180	100.000	105.561	135.000	140.000
Horizontal														
Hor. freq. (kHz)	31.469	37.500	48.077	49.725	50.019	56.746	60.023	61.795	63.337	63.337	68.681	71.713	78.855	81.967
H-total	31.777	26.667	20.800	20.111	19.992	17.707	16.660	16.182	15.789	15.789	14.560	13.945	12.681	12.200
H-blanking	6.355	6.349	4.800	5.586	5.712	4.053	3.657	3.787	3.956	3.956	3.040	3.031	3.200	3.057
H-Front porch	0.636	0.508	1.120	0.559	2.193	0.320	0.203	0.301	0.407	0.407	0.320	0.152	0.237	0.229
H-Sync. width	3.813	2.032	2.400	1.117	1.428	1.813	1.219	1.377	1.701	1.701	1.280	0.909	1.067	1.257
H-Back porch	1.907	3.810	1.280	3.910	2.091	1.920	2.235	2.109	1.849	1.849	1.440	1.970	1.896	1.571
H-Active	25.422	20.317	16.000	14.524	14.280	13.653	13.003	12.395	11.832	11.832	11.520	10.913	9.481	9.143
(μsec)														
Vertical														
Ver. freq. (Hz)	70.087	75.000	72.188	74.550	60.047	70.069	75.029	65.950	59.978	59.978	75.062	76.047	74.112	75.966
V-total	449	500	666	667	833	806	800	937	1056	1056	915	943	1064	1079
V-blanking	49	20	66	43	83	38	32	37	32	32	45	43	40	55
V-Front porch	12	1	37	1	27	3	1	2	3	3	3	2	3	3
V-Sync. width	2	3	6	3	10	6	3	4	3	3	3	8	3	3
V-Back porch	35	16	23	39	46	29	28	31	26	26	39	33	34	49
V-Active	400	480	600	624	750	768	768	900	1024	1024	870	900	1024	1024
(Lines)														
Sync.	External	External	External	Internal	External	External	External	External	Internal	External	Internal	External	Internal	Internal
H-Polarity	(−)	(−)	(+)	NA	(−)	(−)	(+)	(−)	NA	(−)	NA	(−)	NA	NA
V-Polarity	(+)	(−)	(+)	NA	(−)	(−)	(+)	(−)	NA	(−)	NA	(−)	NA	NA
Scanning mode	Non-interlace	Non-interlace	Non-interlace	Non-interlace	Non-interlace	Non-interlace	Non-interlace	Non-interlace	Non-interlace	Non-interlace	Non-interlace	Non-interlace	Non-interlace	Non-interlace

TABLE OF CONTENTS

Section — *Title* — *Page*

1. DISASSEMBLY

1-1. Cabinet and EMI Shield Removal 5
1-2. G Block Assy Removal 5
1-3. A Block Assy Removal 6
1-4. Connector Panel Assy Removal 6
1-5. Chassis Assy Removal 7
1-6. Front Block Assy Removal 7
1-7. Bezel Assy Removal 8
1-8. Picture Tube Removal 8
1-9. Wiring Harness Layout 9

2. SAFETY RELATED ADJUSTMENT 10

3. ADJUSTMENTS 11

4. TROUBLESHOOTING 13

5. DIAGRAMS

5-1. Block Diagrams 14
5-2. Frame Schematic Diagram 19
5-3. Circuit Boards Location 21
5-4. Schematic Diagrams and Printed Wiring Boards
(1) Schematic Diagrams of D, F Boards 25
(2) Schematic Diagram of A Board 29
(3) Schematic Diagram of N Board 39
(4) Schematic Diagrams of H, G and M Boards 43
5-5. Semiconductors 51

6. EXPLODED VIEWS

6-1. Chassis 53
6-2. Picture Tube 54
6-3. Kit 55
6-4. Accessories and Packing Materials 56

7. ELECTRICAL PARTS LIST 57

Function of Controls

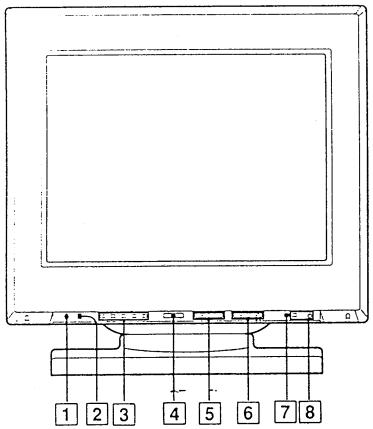

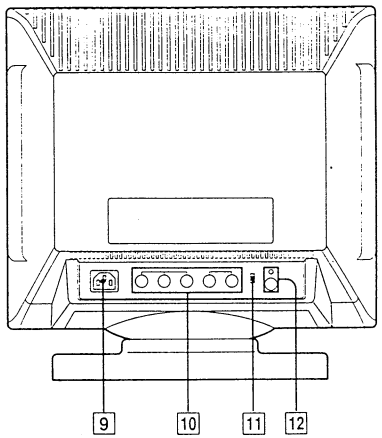

1 **RESET button**
Press to reset the adjustment data to the factory-preset levels for the input signal being received.

2 **CTRL (control) button**
To reset all the adjustment data to the factory-preset levels, press the RESET button 1 while holding down this button.

3 **Indicator**
The indicator corresponding to the item selected with the SELECT button 4 lights up.
CENT: Centering
SIZE: Picture size
GEOM: Picture tilt/Horizontal pincushion
CONV: Convergence
C TEMP: Color temperature

4 **SELECT button**
Press to select an item.
Hold down for more than 1 second until an indicator lights up, then press repeatedly to select an item 3.

5 **○ (brightness) buttons**
Press + or – to adjust the picture brightness.
When an item is selected, use these buttons to adjust the picture size and centering in the vertical direction and the picture tilt.

6 **◑ (contrast) buttons**
Press + or – to adjust the picture contrast.
When an item is selected, use these buttons to adjust the picture size and centering in the horizontal direction, the horizontal pincushion and the colour temperature.

7 **POWER SAVING indicator**
Lights up when the monitor is in Power Saving Mode. Blinks when you reached the limit of the adjustable range or while in resetting mode.

8 **⏻ power switch and indicator**
Press to turn the monitor on or off. The indicator lights up when the monitor is turned on. To disconnect the power supply, disconnect the AC power cord.

9 **AC IN connector**
Plug in an AC power cord.

10 **Video input connector (5 BNC)**
The connector accepts RGB video signals (0.714 Vp-p, positive).

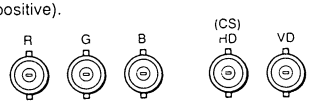

Note

If you use a computer or video board of high output level (about 1.0 Vp-p), you may not be able to obtain the optimum display. In such case, try decreasing the picture contrast, or use a computer or video board with a lower output level.

11 **75Ω/2 kΩ selector**
Switches the impedance of the video input connector 10 termination to 75Ω or to 2 kΩ. When external sync signals are input, normally set this selector to the 75Ω position. If good synchronization cannot be obtained, set this selector to the 2 kΩ position.

12 **SERVICE button and terminal**
The button and the terminal are to be used by service personnel only.

SECTION 1
DISASSEMBLY

1-1. CABINET AND EMI SHIELD REMOVAL

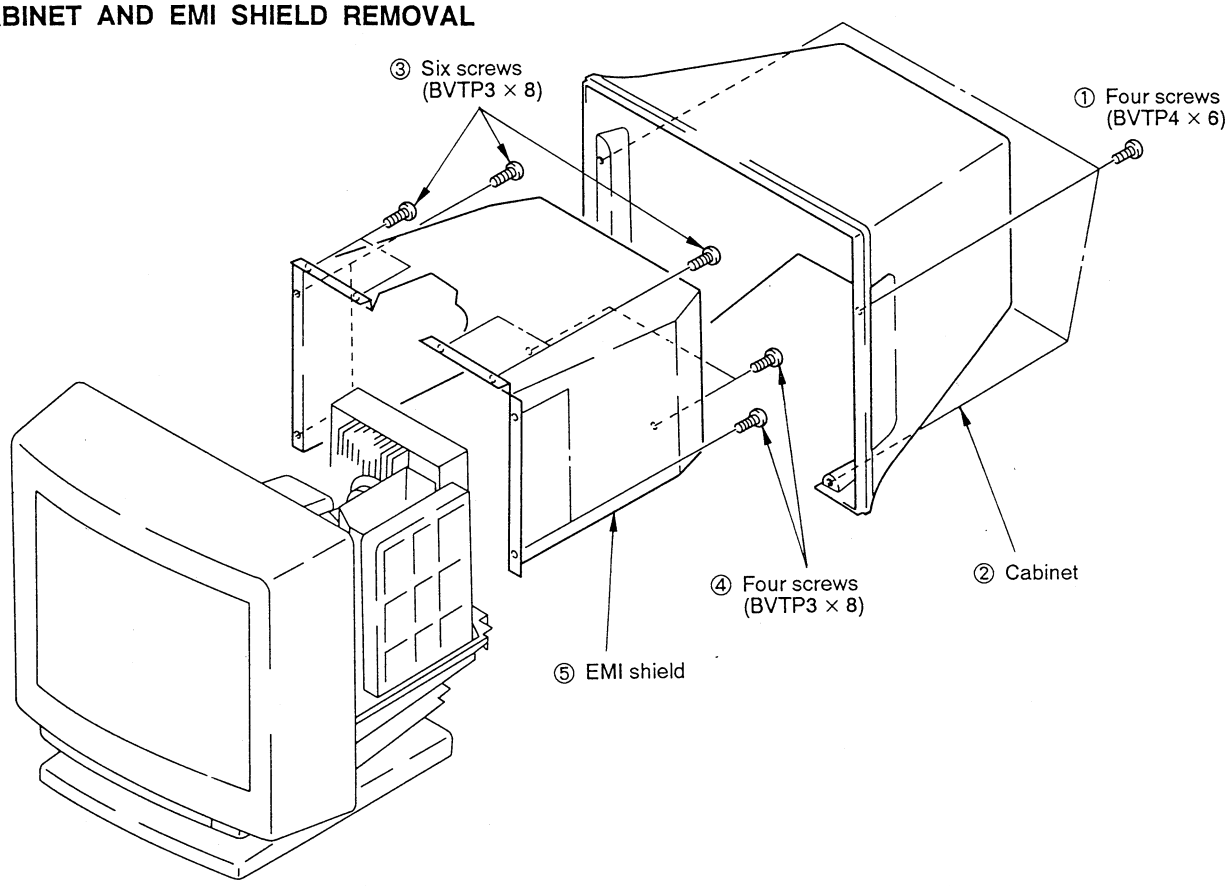

1-2. G BLOCK ASSY REMOVAL

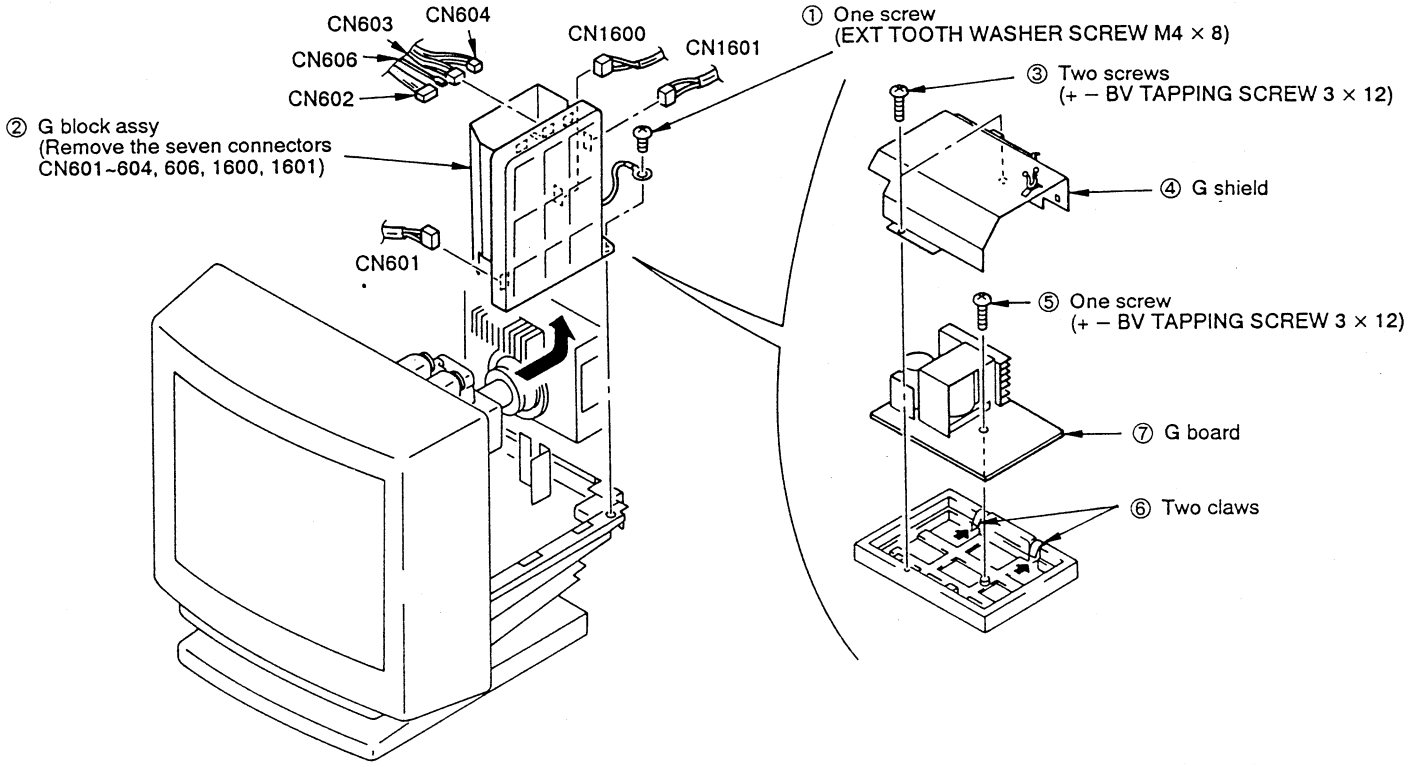

1-3. A BLOCK ASSY REMOVAL

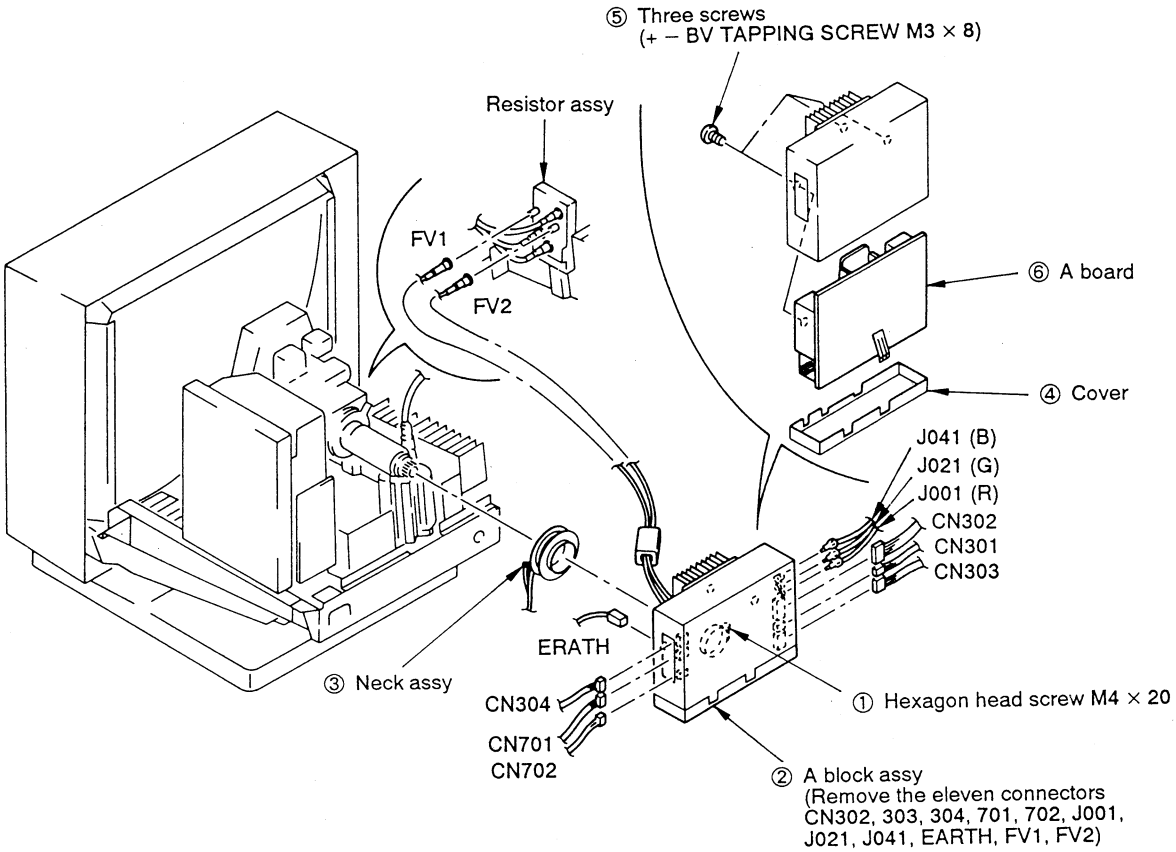

1-4. CONNECTOR PANEL ASSY REMOVAL

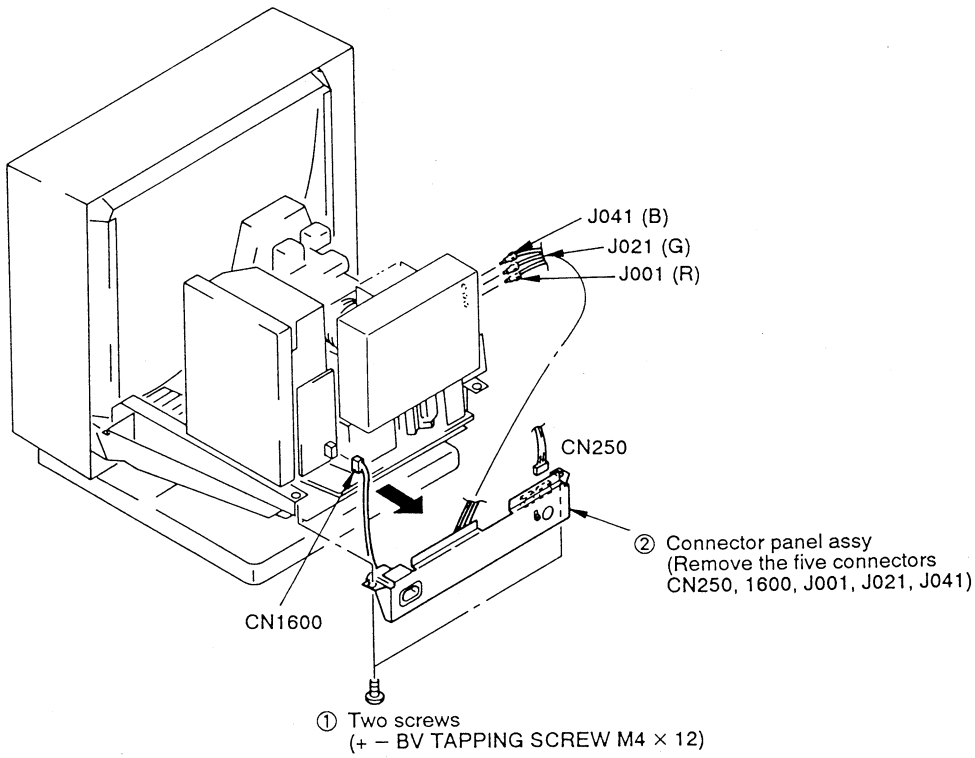

1-5. CHASSIS ASSY REMOVAL

※ Remove the G block assy, A block assy and connector panel assy (See 1-2, 1-3, 1-4)

③ Chassis assy (Remove the four connectors CN H, 400, 501, DGC)

① Two screws (BVTP 4 × 16)

④ Three screws (+ – BV TAAPPING screw 3 × 12)

CN401

N board

CN501

CN400

⑥ D board (Remove the three connectors CN401, MV, ERATH)

MV

② Anode cap

EARTH

H

DGC

⑤ Two claws

1-6. FRONT BLOCK ASSY REMOVAL

※ Remove the chassis assy (See 1-5)

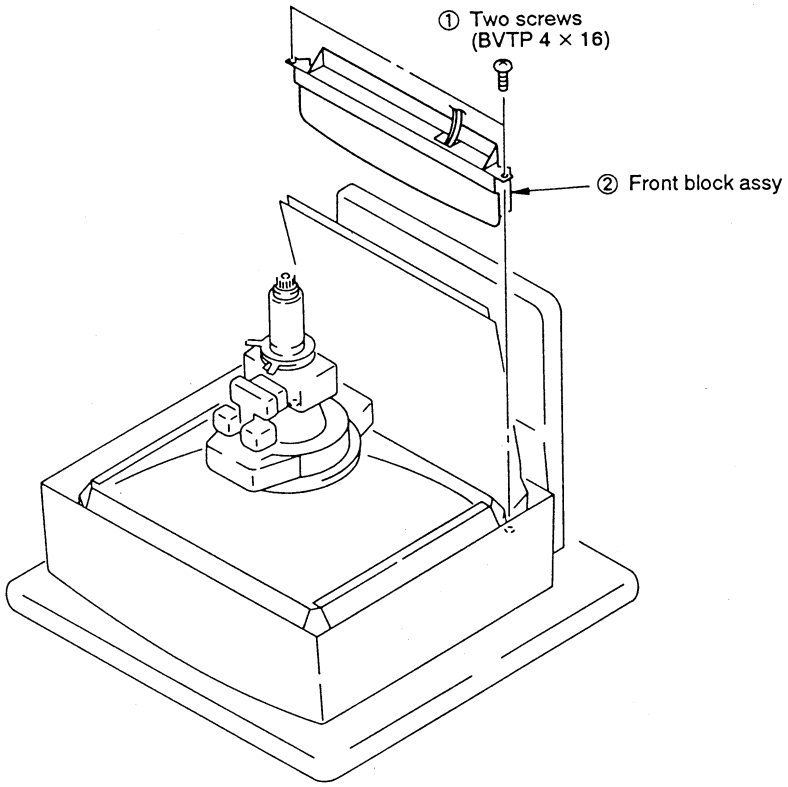

1-7. BEZEL ASSY REMOVAL

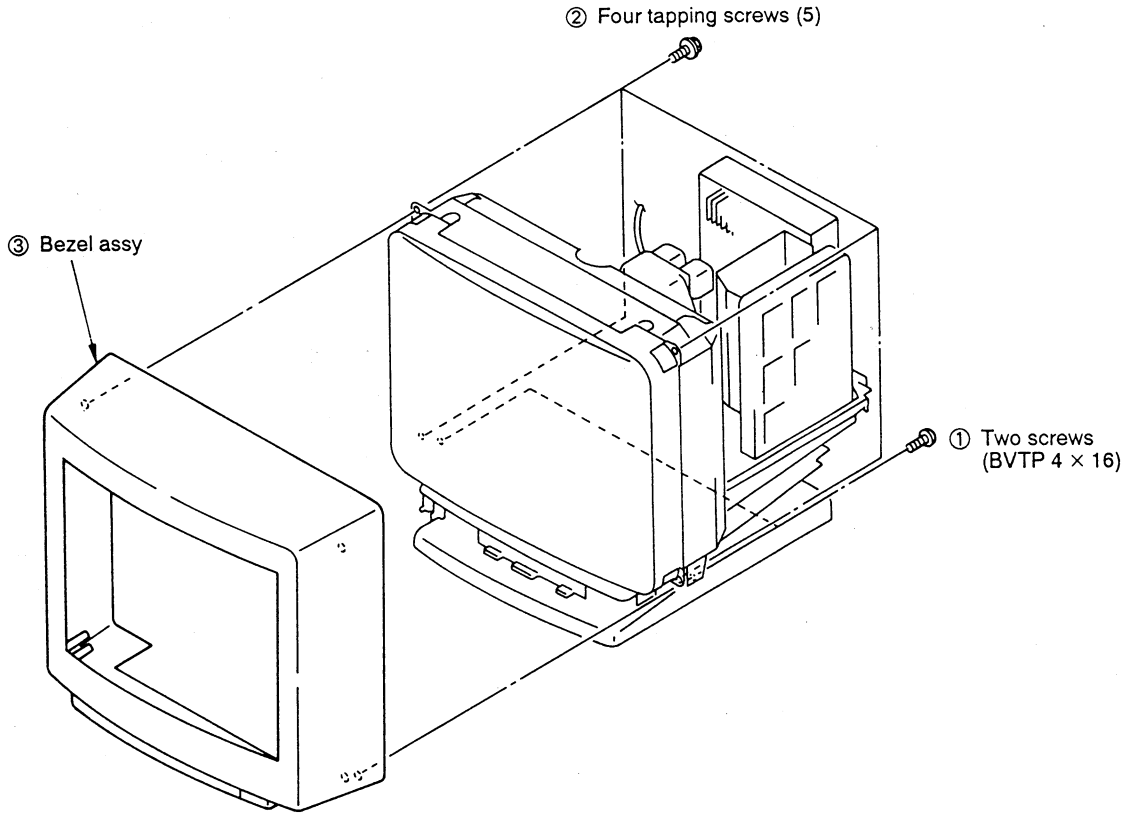

1-8. PICTURE TUBE REMOVAL

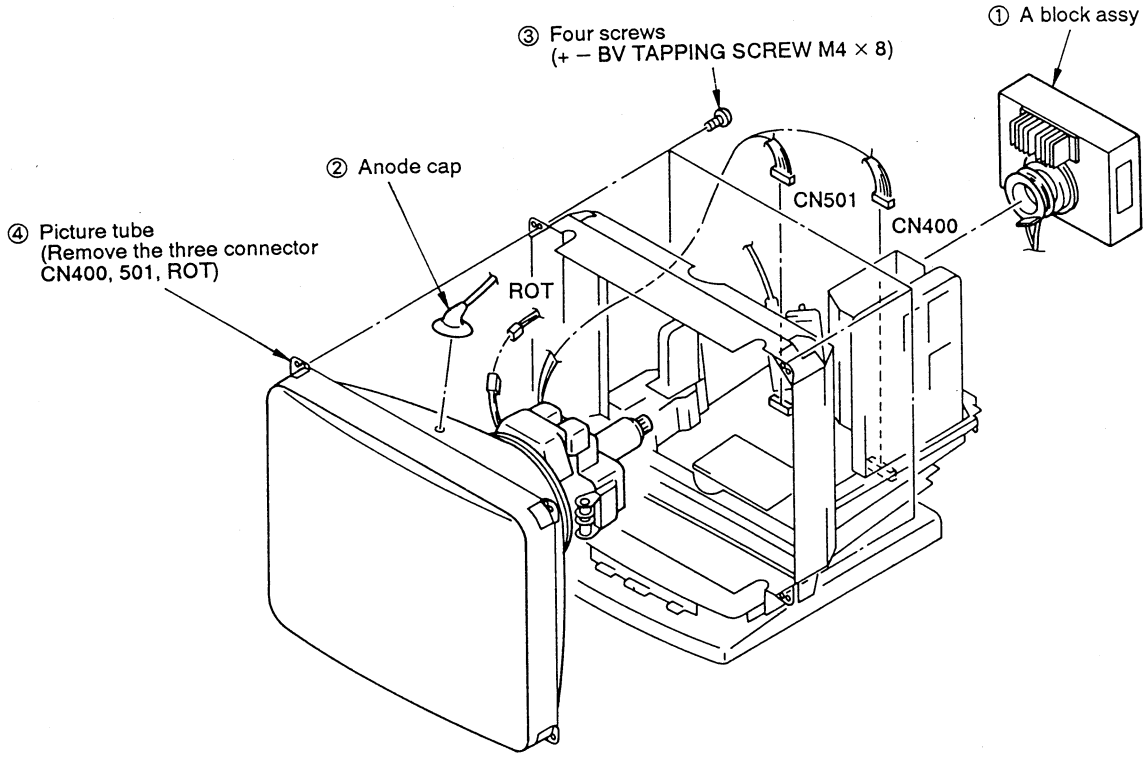

1-9. WIRING HARNESS LAYOUT

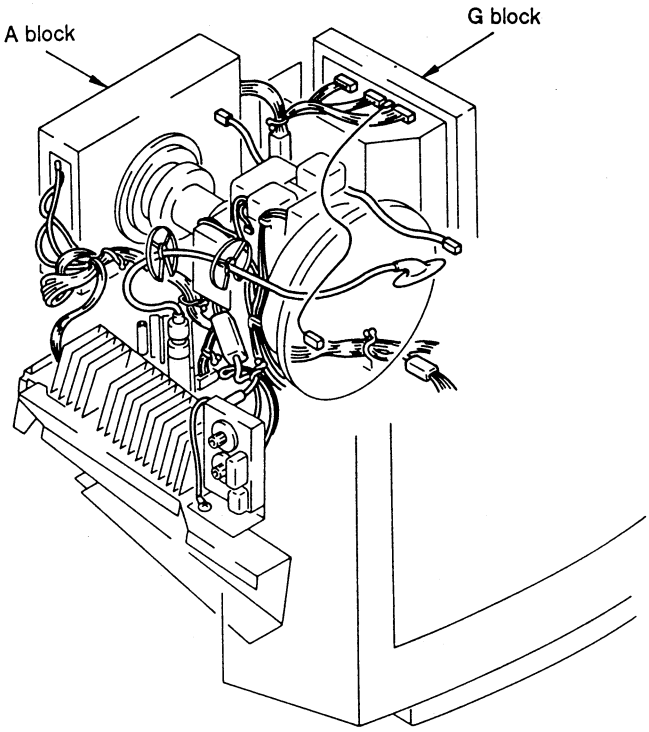

SECTION 2
SAFETY RELATED ADJUSTMENT

When replacing or repairing the shown below table, the following operational checks must be performed as a safety precaution against X-rays emissions from the unit.

HV Regulator Circuit Check	D board------ IC804, T800 • Mounted D board
HV. Hold-Down Circuit Check	D board------ IC804, R826, R832, R842, R843, T800 • Mounted D board
Beam Current Protector Circuit Check	D board------ IC804, T800 • Mounted D board
B+ Regulator Circuit Check	G board------ IC602, IC603, R630 • Mounted G board • Power Supply Block
OVP Circuit Check	G board------ D620, R631, R633, R635, Q610 • Mounted G board • Power Supply Block

a) HV Regulator Check

1) Input a white dot signal and set the contrast and bright to the minimum level.

   check point
   pin ② of CN801 , $9.00^{+0.06}_{-0.06}$ VDC

b) HV Hold-Down Check

1) Check if the raster disappears when the voltage less than 8.80 VDC is applied between pin ⑤ of CN801 and GND from the external power source.

c) Beam Protector-1 and Protector-2 Check

1) Record the initial value of ABL-SHUTDOWN, input the "255" for resistor value.
2) Reduce the resistance gradually from the maximum level using a variable resistor of more than 12 〔K-ohm〕 and an ampermeter connected in series between pin ① of CN801 and GND.
3) Check that the protector circuit operates to disappear the raster when the current level drops less than 1.36 mA.
4) Back the value of ABL-SHUTDOWN to the initial regulation value.

d) B+ Regulator Circuit Check

1) Input a white dot signal and set the contrast and bright to the minimum level.

   check point
   pin ① of CN602, 144.0 ± 3 VDC

SECTION 3
ADJUSTMENTS

Connect the communication cable of the computer (ex. PC-AT) to the connector located on the rear side of the monitor. Run the service software and then follow the instruction.

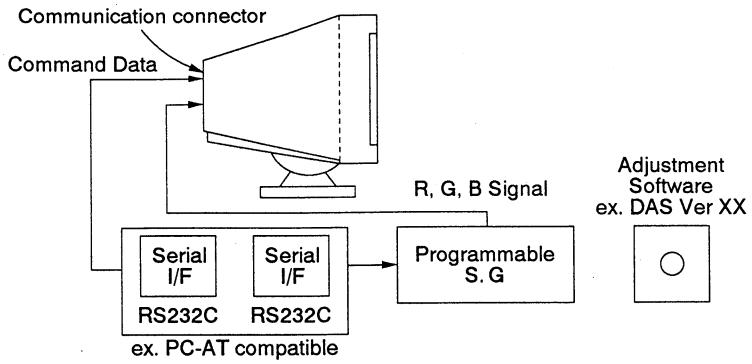

• White Balance Adjustment Specification

Adjustments Procedure	Input signal	Value of CONT, BRT	Adjust point	Specification
Color mode "H" (9300K)				
1	Glay	BRT-110 CONT-255	G2	Green become to be visible.
2	ALL Black	BRT-255 CONT-0	R. CUT MAX, G. CUT MAX, B. CUT MAX	0.283 ± 0.010, 0.298 ± 0.010 (x, y) $Y=4^{+1}_{-0.5}$ cd/m²
3	Glay	BRT-80, G. CUT MIN CONT-255 *Note 1	R. CUT MIN B. CUT MIN	0.283 ± 0.010, 0.298 ± 0.010 (x, y)
4	ALL White	BRT-80 CONT-255 *Note 2	R-DRV, B-DRV, G-DRV	0.283 ± 0.010, 0.298 ± 0.010 (x, y) Y=100 ± 1 cd/m²
5	ALL White	CONT-0 BRT-80	CONT MIN/BRT MAX CONT MIN/BRT MIN	Y=8 ± 1 cd/m²
6			Set CONT MAX/ BRT MAX to 150	
7	ALL White	CONT-255 BRT-255	CONT MAX/BRT MAX	Y= 115 ± 1 cd/m²
8	Save to color and service			
Color mode "M" (6500K)			Copy all data of mode "H"	
1	ALL Black	BRT-255 CONT-0	R. CUT MAX, G. CUT MAX, B. CUT MAX	0.313 ± 0.010, 0.329 ± 0.010 (x, y) $Y=4^{+1}_{-0.5}$ cd/m²
2	Glay	BRT-80, G. CUT MIN CONT-255 *Note 1	R. CUT MIN B. CUT MIN	0.313 ± 0.010, 0.329 ± 0.010 (x, y)
3	ALL White	BRT-80 CONT-255 *Note 3	R-DRV, G-DRV, B-DRV	0.313 ± 0.010, 0.329 ± 0.010 (x, y) Y=85 ± 1 cd/m²
4	ALL White	CONT-0 BRT-80	CONT MIN/BRT MAX CONT MIN/BRT MIN	Y=8 ± 1 cd/m²
5			Set CONT MAX/ BRT MAX to 150	
6	ALL White	CONT-255 BRT-255	CONT MAX/BRT MAX	Y=100 ± 1 cd/m²
Color mode "L" (5000K)			Copy all data of mode "M"	
1	ALL Black	BRT-255 CONT-0	R. CUT MAX, G. CUT MAX, B. CUT MAX	0.345 ± 0.010, 0.358 ± 0.010 (x, y) $Y=4^{+1}_{-0.5}$ cd/m²
2	Glay	BRT-80, G. CUT MIN CONT-255 *Note 1	R. CUT MIN B. CUT MIN	0.345 ± 0.010, 0.358 ± 0.010 (x, y)
3	ALL White	BRT-80 CONT-255 *Note 2	R-DRV, G-DRV, B-DRV	0.345 ± 0.010, 0.358 ± 0.010 (x, y) Y=75 ± 1 cd/m²
4	ALL White	CONT-0 BRT-80	CONT MIN/BRT MAX CONT MIN/BRT MIN	Y=8 ± 1 cd/m²
5			Set CONT MAX/ BRT MAX to 150	
6	ALL White	CONT-255 BRT-255	CONT MAX/BRT MAX	Y=90 ± 1 cd/m²

*Note 1 : $\frac{110 \times 255 - 80 \times [\text{G. CUT MAX Value}]}{175}$

*Note 2 : Return to 3 for tracking. *Note 3 : Return to 2 for tracking.

- **Vertical and Horizontal Position and Size Specification**

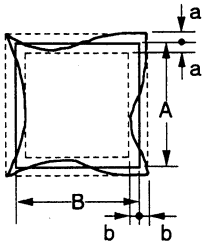

a < 2.8 mm
b < 2.8 mm

mode	A	B
16 × 12 16 × 10	360	270
20 × 16	350	280

- **Convergence Specification**

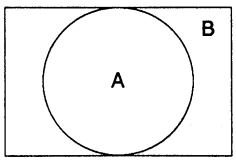

A ≦ 0.30 mm
B ≦ 0.40 mm

- **Geometric Adjustment Methods (All BUS cont)**

1. V-CENT ADJ
2. V-SIZE ADJ
3. V-KEY ADJ
4. V-LIN BALANCE ADJ
5. V-LIN ADJ
6. H-CENT ADJ
7. H-POSI ADJ
8. H-SIZE ADJ
9. KEY BALANCE ADJ
10. KEY ADJ
11. SIDE PIN BALANCE ADJ
12. PIN AMP ADJ
13. S-LINE ADJ
14. SEXY-LINE ADJ

1. CONVERGENCE ROUGH ADJUSTMENT

(1) Receive an image of the white crosshatch signals.
(2) Place the protrusions of the 6-fold poles magnet attached to the CRT neck upon each other (See figure).
(3) Make rough adjustment of the H direction convergence by using H. STAT VR (right side of the video case).
(4) Make a rough adjustment of the V direction convergence by using "V. STAT".

2. CONVERGENCE FINE ADJUSTMENT

(1) Input white crosshatch signals (white lines on black) in the prime mode.
Adjust the screen size to 360 × 280.

(2) Confirm that the values of "H. CONV" and "V. CONV" are "0" (center).
(3) Turn the magnet ring (6-fold poles) behind DY and correct to zero. (See figure.)
(4) Turn the H. STAT VR and set the parallel lines of the 3 colors R, G and B (vertical lines). Set the parallel lines of the 3 colors R, G and B with "V. CONV" (horizontal lines).
(5) Turn the magnet ring (6-fold poles) behind the neck assembly and adjust so that the R-G distance of the parallel lines of the 3 colors and the B-G distance become identical (See figure 2).
(6) Return the value of H. STAT VR and "V. CONV" used in (3) and set the misconvergence of the center of the screen to zero.

(7) Fine adjustment of convergence
a) Set "V. CONV TOP" and "V. CONV BOT" to zero.
b) Turn the XBV reactor and adjust the XBV misconvergence.
(The reactor on the far left side of the upper circuit board when seen from the CRT side.)
c) Turn the XCV reactor and adjust the XCV misconvergence.
(The reactor on the near left side of the upper circuit board when seen from the side.)
Note: When adjusting XBV, the "V. CONV" shall be reajusted.
When XCV exceeds the adjustment range, oscillate the upper and lower parts of DY and adjust.
d) Turn the APH reactor and adjust th H. AMP misconvergence.
(The near center reactor of the upper circuit board when see from the CRT tube side.)

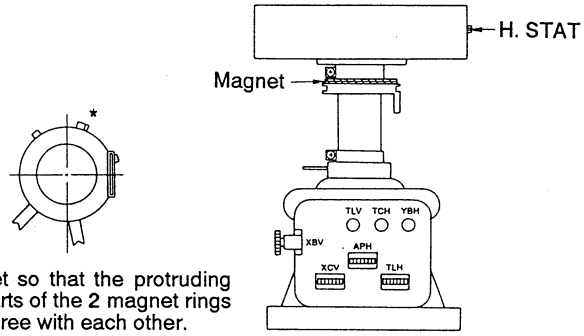

* Set so that the protruding parts of the 2 magnet rings agree with each other.

e) Turn the TLH reactor and adjust the H. TILT misconvergence.
(The near right side reactor of the upper circuit board when seen from the CRT tube side.)
(Note: Readjust H. STAT VR too.)
f) Adjust the YBH misconvergence with the VR YBH on the DY.
(The far right side VR when seen from the CRT tube side.)
g) Adjust the YCH misconvergence with the VR YCH on DY.
(The far center VR when seen from the CRT tube side.)
h) Adjust "V. CONV BOT".
i) Adjust "V. CONV TOP".
j) Adjust the upper and lower TLV with VR TLV on DY as necessity required.
(The far left side VR when seen from the CRT tube side.)
(Note: When the horizontal trapezoid does not agree with the specification, carry out left and right oscillation and tracking of DY.)
k) Confirm the convergence of the whole screen, and carry out H. STAT correction and the operations of c) – k), and Permalloy correction.
l) Confirm the convergence of the whole screen.
m) Switch the mode between the prime mode and the convergence check mode (see table on P. 41-2), and confirm the convergence in each mode after having carried out fine adjustment with H. STAT and V. STAT on the front panel.
n) Fix the 2 places of the XBV, XCV, APH and TCH reactors and the 6-fold poles with a white pen.
o) Fix the DV spacer (large) and the Permalloy with RTV.

SECTION 4
TROUBLESHOOTING

This diagnostic troubleshooting guide uses the monitor symptom as a clue for selecting a repair procedure. Select the listed symptom closest to that of your monitor and follow the procedure given for that symptom in this troubleshooting guide. If the same trouble recurs even after you have changed a block or part, re-install the original block or part, then proceed to the next step.

Symptoms	Repair Procedure
• No Power	1. Check whether the internal power supply connector is connected. 2. Inspect the power supply fuse. → If it has blown, change it. If it blows again, proceed to the next step. 3. Change the Power block. 4. Change the D board block.
• Sametime shutdown after work while	1. Check the hold down voltage. 2. Change the hight voltage capacitor. C805 3. Change the D board block.
• Abnormal coil demagnetization	1. Change the Power block.
• No Picture	1. Adjust the CONTRAST control. 2. Confirm the input signal. 3. Confirm connector between power block and D board. 4. Inspect the power supply fuse. → If it has blown, change it. If it blows again, proceed to the next step. 5. Change the Power block. 6. Change the D board block. 7. Change the A board. 8. Change the U board. 9. Change the CRT.
• Display area too small/large/short/tall/ narrow/wide	1. Adjust the horizontal or vertical size. 2. Change the D board block.
• Horizontal distortion	1. Re-adjust using the service software. 2. Change the D board block.
• Vertical distortion	1. Re-adjust using the service software. 2. Change the D board block.
• Picture tilted	1. Make the tilt adjustment.
• Picture flickers	1. Check the fastening of the ground line. 2. Check the grounding of the connected computer. 3. Change the D board Block.
• Brightness can not be adjusted	1. Change the A board. 2. Change the H board.
• Contrast can not be adjusted	1. Change the A board. 2. Change the H board.
• Picture too bright/dark	1. Adjust the BRIGHTNESS control. 2. Adjust the white balance. 3. Adjust the CONTRAST and BRIGHT controls. 4. Change the A board. 5. Change the Power block. 6. Change the CRT.

For picture size, pictuer distortion, and other specifications, place the ball chart on the set and check and adjust.

m as a clue for selecting a repair procedure. Select the listed re given for that symptom in this troubleshooting guide. If the e-install the original block or part, then proceed to the next step.

cedure

ıer the internal power supply connector is connected.
ower supply fuse.
ılown, change it. If it blows again, proceed to the next step.
Power block.
D board block.

ıld down voltage.
ıight voltage capacitor. C805
D board block.

Power block.

ONTRAST control.
input signal.
nector between power block and D board.
ower supply fuse.
ılown, change it. If it blows again, proceed to the next step.
Power block.
D board block.
A board.
J board.
CRT.

ırizontal or vertical size.
D board block.

ng the service software.
D board block.

ng the service software.
D board block.

adjustment.

stening of the ground line.
ounding of the connected computer.
D board Block.

board.
board.

board.
board.

RIGHTNESS control.
ıite balance.
ONTRAST and BRIGHT controls.
board.
ower block.
RT.

ıe ball chart on the set and check and adjust.

5-1. BLOCK DIAGRAMS

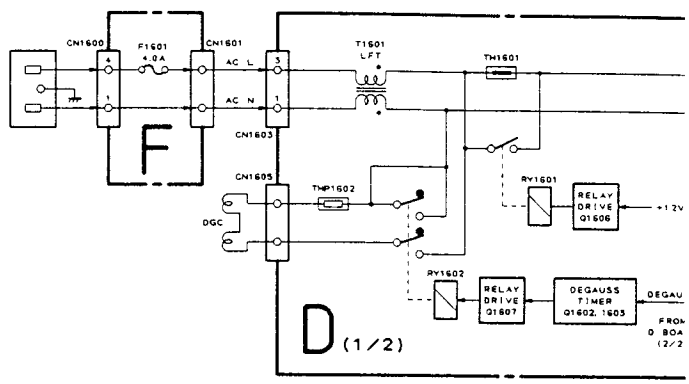

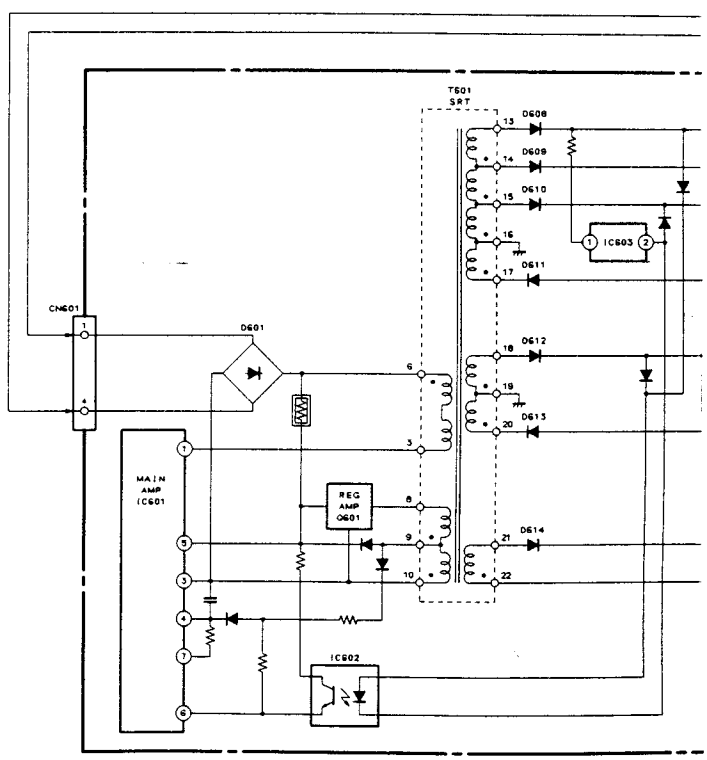

SECTION 5
DIAGRAMS

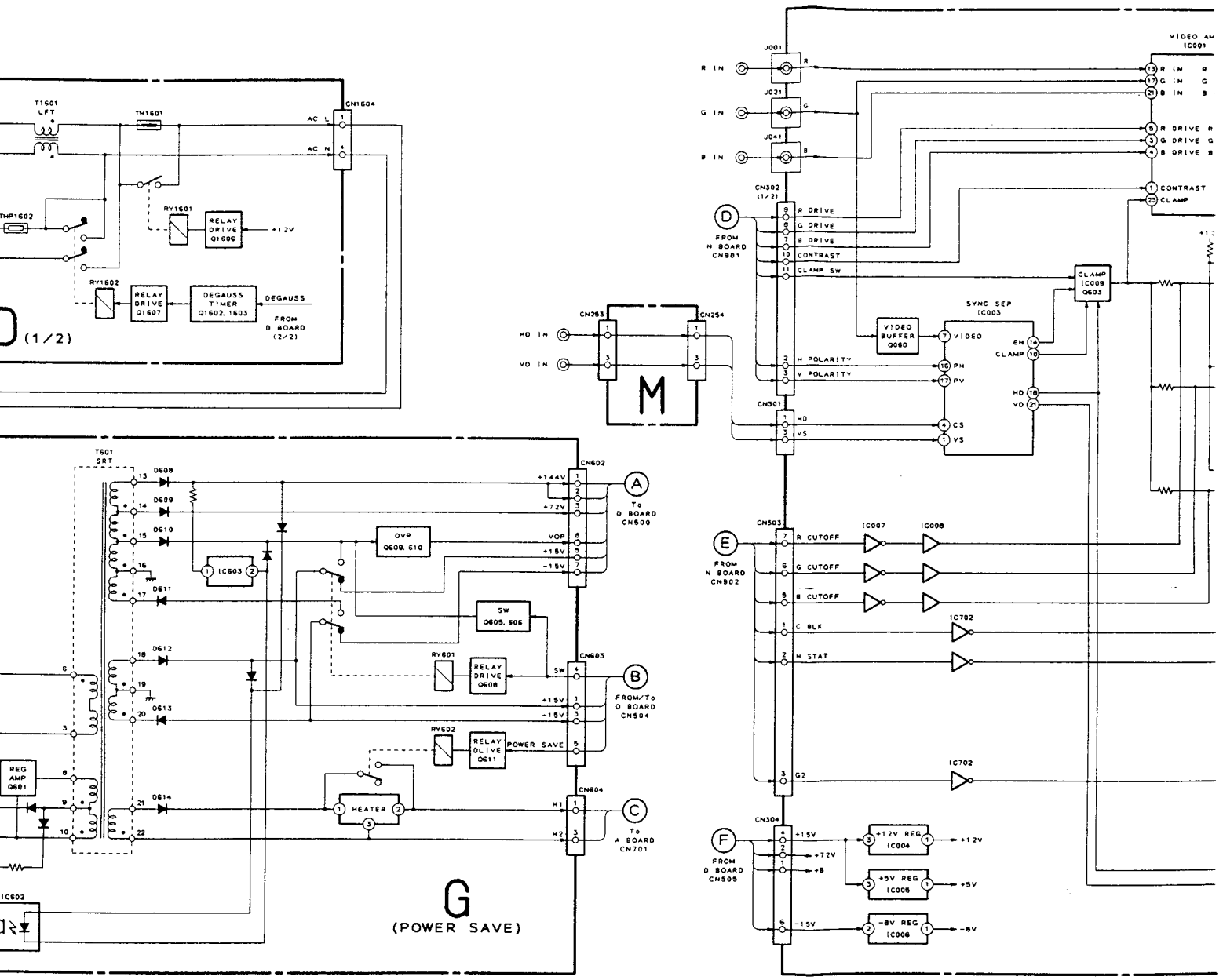

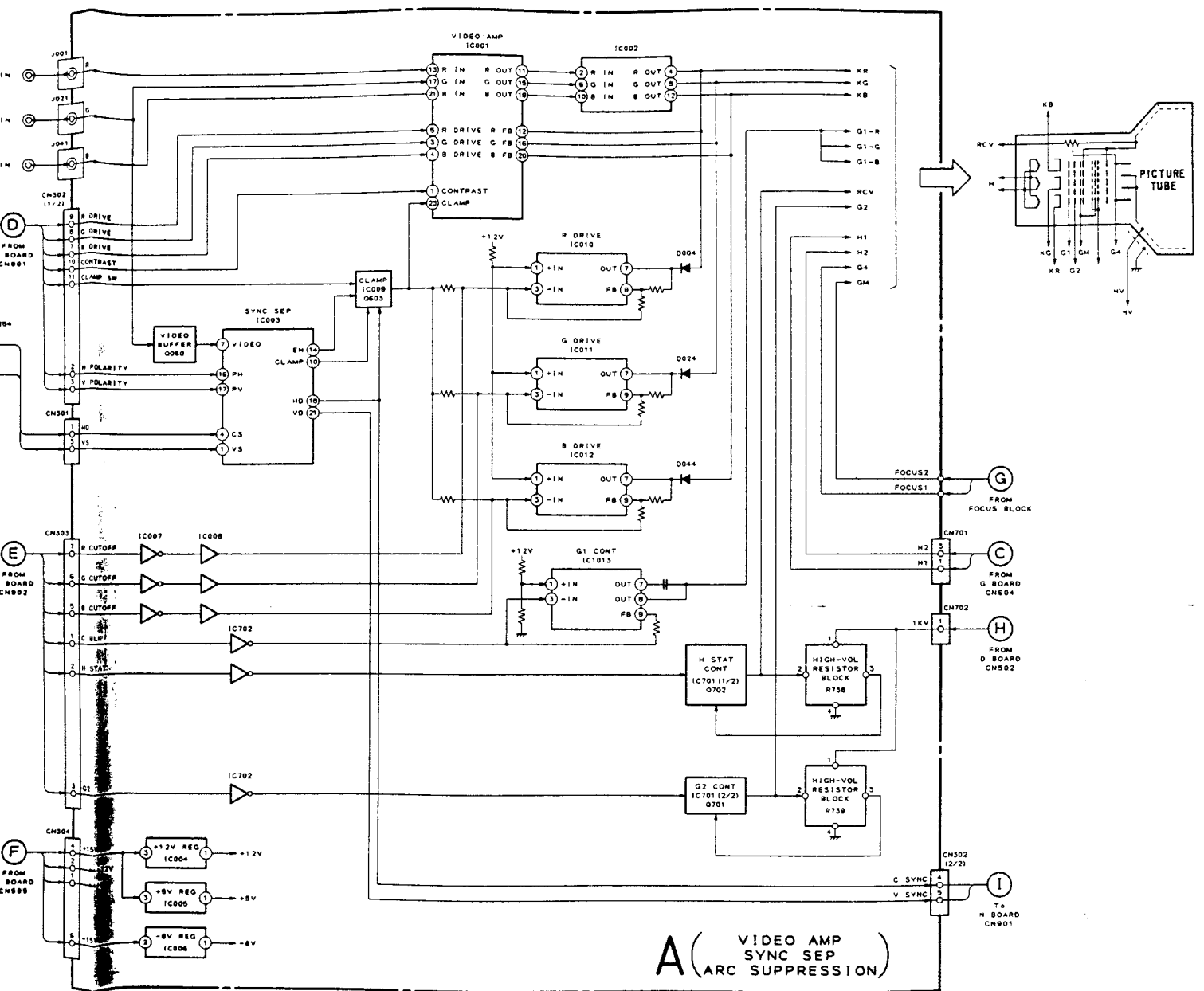
VIDEO AMP
IC001
IC002
R IN
G IN
B IN
R OUT
G OUT
B OUT
R DRIVE
G DRIVE
B DRIVE
R FB
G FB
B FB
CONTRAST
CLAMP
KR
KG
KB
G1-R
G1-G
G1-B
RCV
G2
H1
H2
G4
GM
PICTURE TUBE
R DRIVE
IC010
G DRIVE
IC011
B DRIVE
IC012
D004
D024
D044
+12V
CLAMP
IC009
Q603
SYNC SEP
IC003
VIDEO BUFFER
Q060
VIDEO
EH
CLAMP
HD
VD
H POLARITY
V POLARITY
PH
PV
CS
VS
CN302
CN301
CN303
CN304
CN701
CN702
CN502
FOCUS2
FOCUS1
FROM FOCUS BLOCK
FROM G BOARD CN604
FROM D BOARD CN502
To H BOARD CN901
R CUTOFF
G CUTOFF
B CUTOFF
C BLK
H STAT
G2
IC007
IC008
IC702
G1 CONT
IC013
H STAT CONT
IC701 (1/2)
Q702
G2 CONT
IC701 (2/2)
Q701
HIGH-VOL RESISTOR BLOCK
R738
R739
1KV
C SYNC
V SYNC
+12V REG
IC004
+5V REG
IC005
-5V REG
IC006
+12V
+5V
-5V
A
VIDEO AMP
SYNC SEP
ARC SUPPRESSION

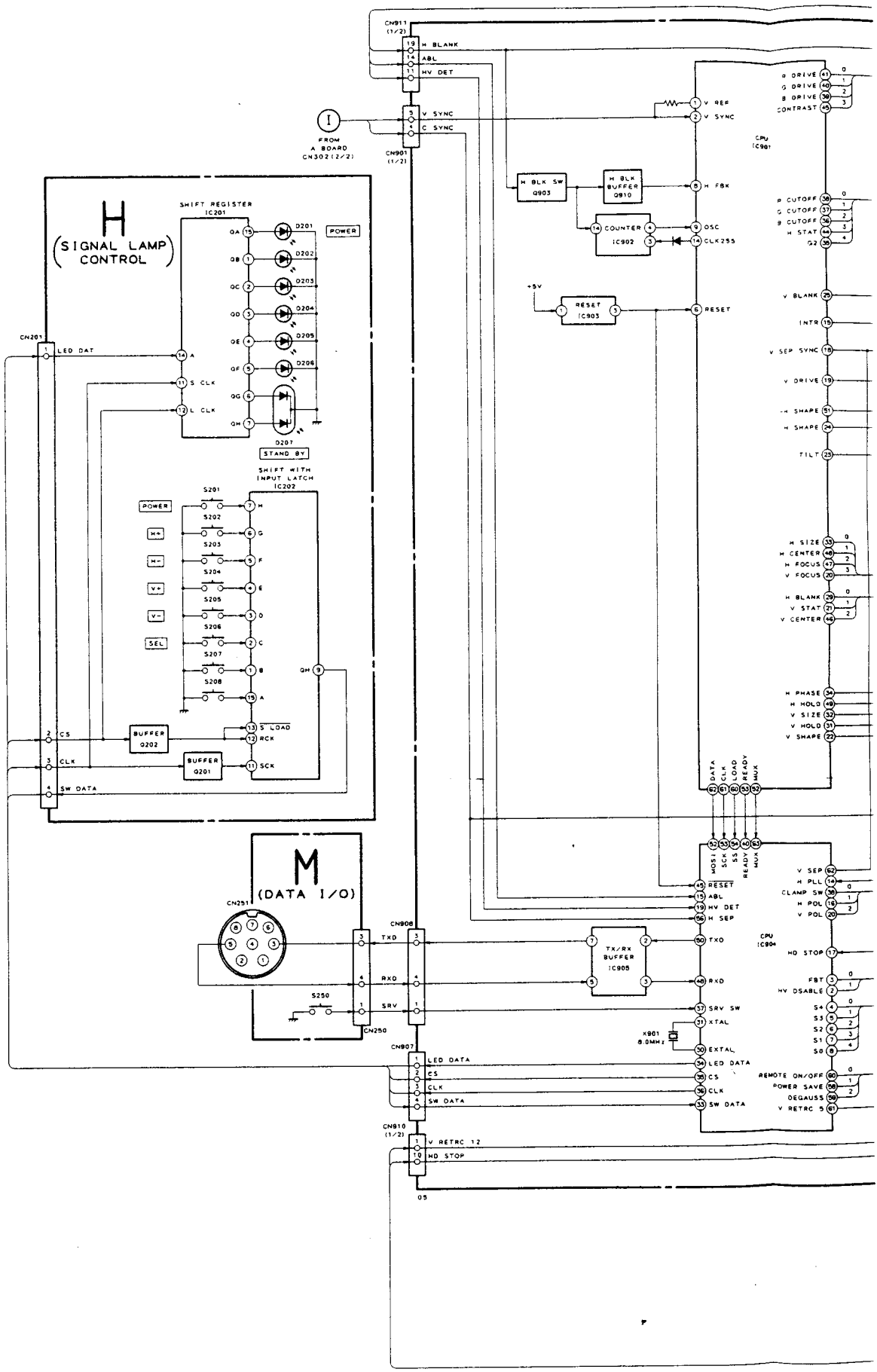
H
(SIGNAL LAMP CONTROL)
SHIFT REGISTER IC201
POWER
STAND BY
SHIFT WITH INPUT LATCH IC202
BUFFER Q202
BUFFER Q201
M
(DATA I/O)
CN251
CN250
CN908
CN907
CN910
CN911
CN901
CN201
FROM A BOARD CN302 (2/2)
H BLK SW Q903
H BLK BUFFER Q910
COUNTER IC902
RESET IC903
TX/RX BUFFER IC905
CPU IC901
CPU IC904
X901 8.0MHz
LED DAT
S CLK
L CLK
CS
CLK
SW DATA
LED DATA
V RETRC 12
HD STOP
H BLANK
ABL
HV DET
V SYNC
C SYNC
V REF
H FBK
OSC
CLK255
RESET
TXD
RXD
SRV
SRV SW
XTAL
EXTAL
R DRIVE
G DRIVE
B DRIVE
CONTRAST
R CUTOFF
G CUTOFF
B CUTOFF
H STAT
V BLANK
INTR
V SEP SYNC
V DRIVE
H SHAPE
TILT
H SIZE
H CENTER
H FOCUS
V FOCUS
V STAT
V CENTER
H PHASE
H HOLD
V SIZE
V HOLD
V SHAPE
V SEP
H PLL
CLAMP SW
H POL
V POL
FBT
HV DSABLE
REMOTE ON/OFF
POWER SAVE
DEGAUSS
V RETRC 5

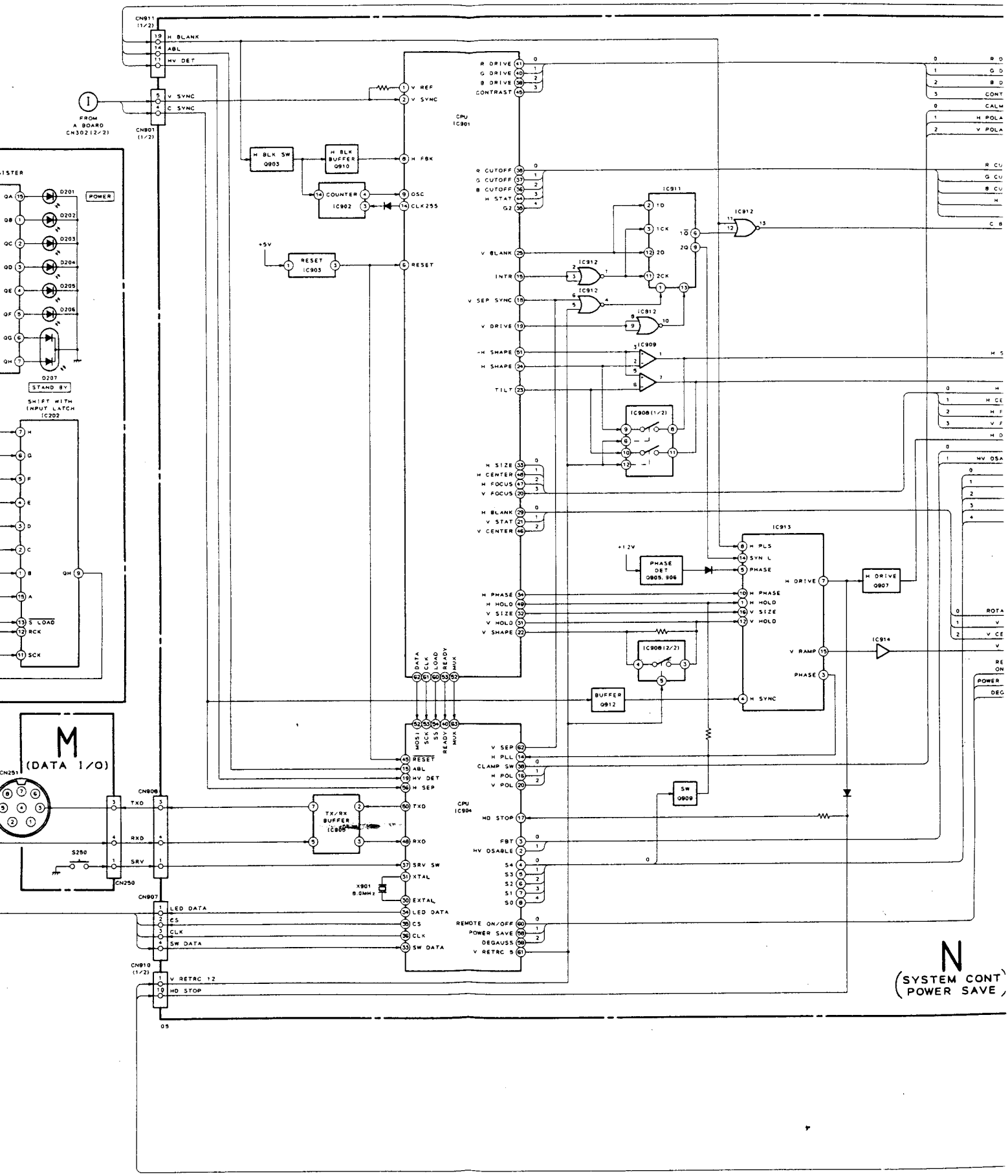
CN911 (1/2)
H BLANK
ABL
HV DET
V SYNC
C SYNC
CN901 (1/2)
FROM A BOARD CN302 (2/2)
POWER
STAND BY
SHIFT WITH INPUT LATCH IC202
S LOAD
RCK
SCK
M
(DATA I/O)
CN251
CN908
TXD
RXD
SRV
S250
CN250
CN907
LED DATA
CS
CLK
SW DATA
CN910 (1/2)
V RETRC 12
HD STOP
H BLK SW Q903
H BLK BUFFER Q910
COUNTER IC902
RESET IC903
+5V
V REF
V SYNC
H FBK
OSC
CLK255
RESET
CPU IC901
R DRIVE
G DRIVE
B DRIVE
CONTRAST
R CUTOFF
G CUTOFF
B CUTOFF
H STAT
G2
V BLANK
INTR
V SEP SYNC
V DRIVE
H SHAPE
TILT
H SIZE
H CENTER
H FOCUS
V FOCUS
V STAT
V CENTER
H PHASE
H HOLD
V SIZE
V HOLD
V SHAPE
DATA
CLK
LOAD
READY
MUX
MOSI
SCK
SS
V SEP
H PLL
CLAMP SW
H POL
V POL
HD STOP
FBT
HV DSABLE
S4
S3
S2
S1
S0
REMOTE ON/OFF
POWER SAVE
DEGAUSS
V RETRC 5
TX/RX BUFFER IC905
XTAL
EXTAL
X901 8.0MHz
IC911
IC912
IC909
IC908 (1/2)
IC908 (2/2)
IC913
H PLS
SYN L
PHASE
H DRIVE
V RAMP
H SYNC
+12V
PHASE DET Q905, 906
H DRIVE Q907
IC914
BUFFER Q912
SW Q909
N
(SYSTEM CONT
POWER SAVE)

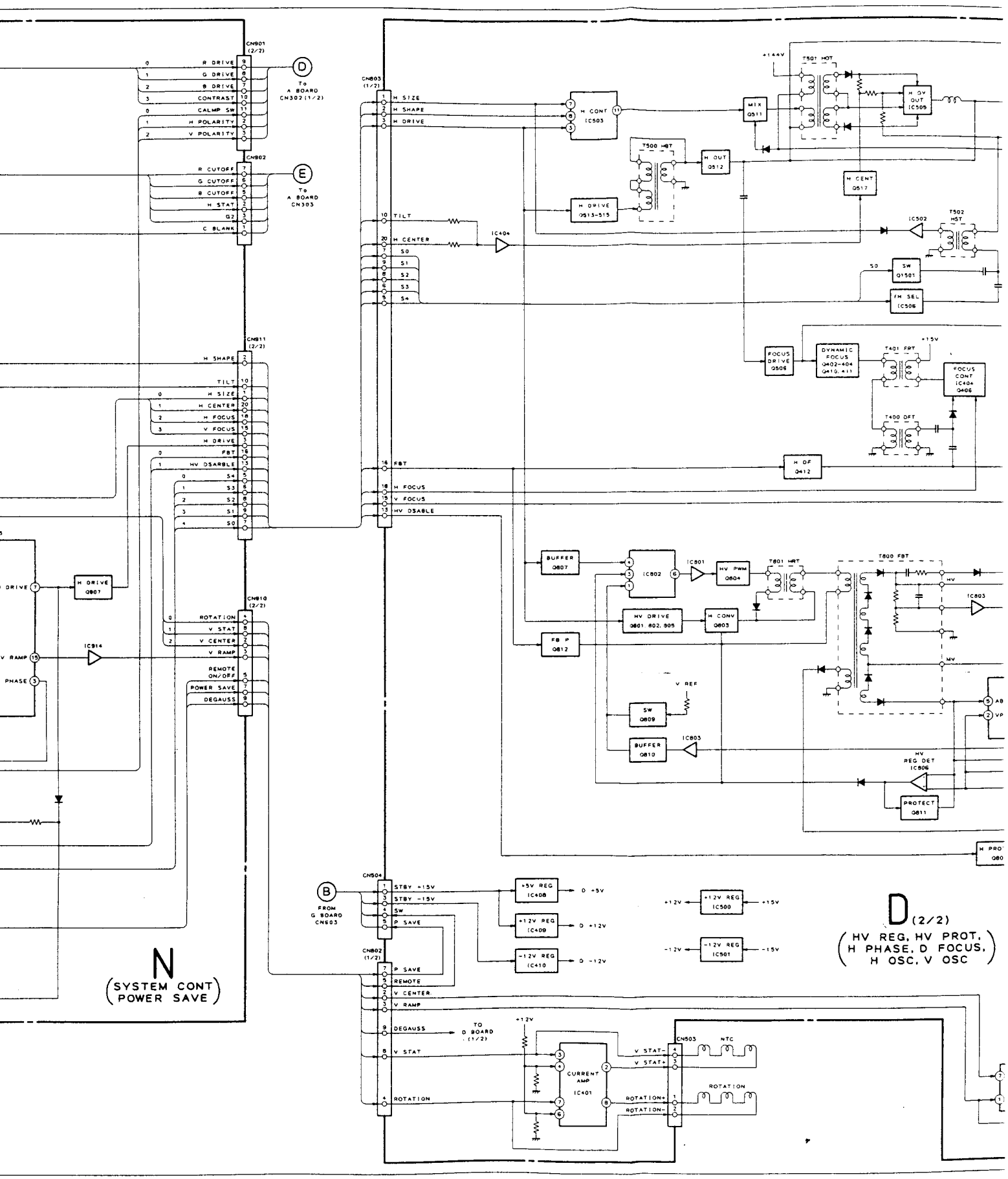
CN901 (2/2)
R DRIVE
G DRIVE
B DRIVE
CONTRAST
CALMP SW
H POLARITY
V POLARITY
To A BOARD CN302 (1/2)
CN902
R CUTOFF
G CUTOFF
B CUTOFF
H STAT
G2
C BLANK
To A BOARD CN303
CN811 (2/2)
H SHAPE
TILT
H SIZE
H CENTER
H FOCUS
V FOCUS
H DRIVE
FBT
HV DSABLE
S4
S3
S2
S1
S0
CN810 (2/2)
ROTATION
V STAT
V CENTER
V RAMP
REMOTE ON/OFF
POWER SAVE
DEGAUSS
H DRIVE Q807
IC814
N
(SYSTEM CONT POWER SAVE)
CN803 (1/2)
H SIZE
H SHAPE
H DRIVE
TILT
H CENTER
S0
S1
S2
S3
S4
FBT
H FOCUS
V FOCUS
HV DSABLE
H CONT IC503
T500 HRT
H OUT Q512
H DRIVE Q513-515
IC404
+144V
T501 HOT
MIX Q511
H DY OUT IC505
H CENT Q517
IC502
T502 HST
SW Q1501
FM SEL IC506
FOCUS DRIVE Q505
DYNAMIC FOCUS Q402-404 Q410, 411
T401 FPT
+15V
FOCUS CONT IC404 Q406
T400 DFT
H DF Q412
BUFFER Q807
IC802
IC801
HV PWM Q804
T801 HRT
T800 FBT
HV DRIVE Q801, 802, 805
H CONV Q803
FB P Q812
IC803
V REF
SW Q809
BUFFER Q810
HV REG DET IC806
PROTECT Q811
CN504
STBY +15V
STBY -15V
SW
P SAVE
FROM G BOARD CN603
+5V REG IC408
D +5V
+12V REG IC409
D +12V
-12V REG IC410
D -12V
+12V REG IC500
-12V REG IC501
CN802 (1/2)
P SAVE
REMOTE
V CENTER
V RAMP
DEGAUSS
TO D BOARD (1/2)
V STAT
ROTATION
CURRENT AMP IC401
CN503
NTC
V STAT-
V STAT+
ROTATION+
ROTATION-
D (2/2)
(HV REG, HV PROT, H PHASE, D FOCUS, H OSC, V OSC)

POWER SAVING FUNCTION

The unit supports the computers corresponding to the "Power Saving Function".

Power saving operation

- The H sync or V sync is not present.

  ↓

  The unit goes into suspend mode.

- Both the H sync and V sync are not present.

  ↓

  The unit goes into active-off mode.

Note

As this unit has the Power Saving Function, if you turn on the unit with no signal input, the unit goes into Power Saving mode and waits for an input signal.

CAUTION

Turn power off and disconnect the power cord when you will disassemble the unit since.

TIMING SPECIFICATION

Mode	1	2	3	4	5	6	7	8	9
Resolution (H x V)	640 x 480	720 x 400	800 x 600	832 x 624	1024 x 768	1024 x 768	1152 x 870	1280 x 1024	1280 x 1024
Dot Clock (MHz)	25.175	28.322	50.000	57.285	75.000	80.000	100.000	110.000	135.000
Horizontal									
Hor. freq. (kHz)	31.469	31.469	48.077	49.727	56.476	60.241	68.681	63.953	78.855
H-total	31.778	31.777	20.800	20,110	17.707	16.600	14.560	15.636	12.681
H-blanking	6.356	6.355	4.800	5.586	4.053	3.800	3.040	4.000	3.200
H-Front porch	0.636	0.636	1.120	0.559	0.320	0.550	0.320	0.727	0.237
H-Sync. width	3.813	3.813	2.400	1.117	1.813	1.200	1.280	1.018	1.067
H-Back porch	1.907	1.907	1.280	3.910	1.920	2.050	1.440	2.255	1.896
H-Active (μsec)	25.422	25.422	16.000	14.524	13.653	12.800	11.520	11.636	9.481
Vertical									
Ver. freq. (Hz)	59.940	70.087	72.188	74.553	70.069	74.927	75.062	59.938	74.112
V-total	525	449	666	667	806	804	915	1067	1064
V-blanking	45	49	66	43	38	36	45	43	40
V-Front porch	10	12	37	3	3	3	3	1	0
V-Sync. width	2	2	6	3	6	3	3	5	30
V-Back porch	33	35	23	37	29	30	39	37	10
V-Active (Lines)	480	400	600	624	768	768	870	1024	1024
Sync.	External	External	External	Internal	External	Internal	Internal	External	External
H-Polarity	(−)	(−)	(+)	N.A	(−)	N.A	N.A	(−)	(+)
V-Polarity	(−)	(+)	(+)	N.A	(−)	N.A	N.A	(−)	(+)
Scanning mode	Non-interlace	Non-interlace	Non-interlace	Non-interlace	Non-interlace	Non-interlace	Non-interlace	Non-interlace	Non-interlace

WARNING!!

NEVER TURN ON THE POWER IN A CONDITION IN WHICH THE DEGAUSS COIL HAS BEEN REMOVED.

SAFETY-RELATED COMPONENT WARNING!!

COMPONENTS IDENTIFIED BY SHADING AND MARK ⚠ ON THE SCHEMATIC DIAGRAMS, EXPLODED VIEWS AND IN THE PARTS LIST ARE CRITICAL FOR SAFE OPERATION. REPLACE THESE COMPONENTS WITH SONY PARTS WHOSE PART NUMBERS APPEAR AS SHOWN IN THIS MANUAL OR IN SUPPLEMENTS PUBLISHED BY SONY. CIRCUIT ADJUSTMENTS THAT ARE CRITICAL FOR SAFE OPERATION ARE IDENTIFIED IN THIS MANUAL. FOLLOW THESE PROCEDURES WHENEVER CRITICAL COMPONENTS ARE REPLACED OR IMPROPER OPERATION IS SUSPECTED.

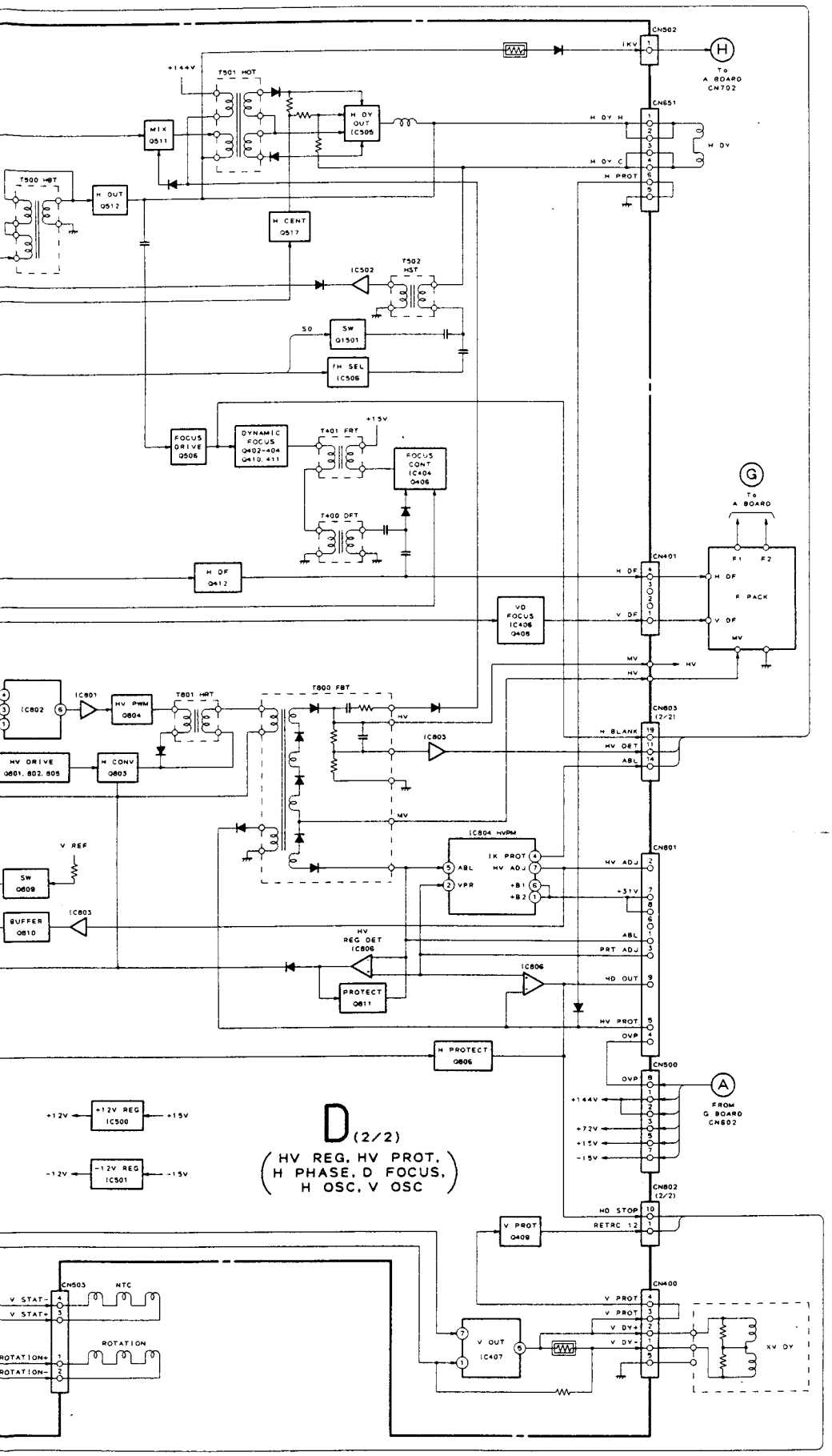
CN502
1KV
To A BOARD CN702
CN651
H DY H
H DY C
H PROT
H DY
T501 HOT
+144V
MIX Q511
H DY OUT IC505
T500 HOT
H OUT Q512
H CENT Q517
IC502
T502 HST
SW Q1501
SO
FH SEL IC506
FOCUS DRIVE Q506
DYNAMIC FOCUS Q402~404 Q410, 411
T401 FBT
+15V
FOCUS CONT IC404 Q406
T400 DFT
H DF Q412
VD FOCUS IC406 Q408
CN401
H DF
V DF
MV
HV
To A BOARD
F1
F2
F PACK
IC801
HV PWM Q804
T801 HOT
T800 FBT
IC802
HV DRIVE Q801, 802, 805
H CONV Q803
IC803
CN803 (2/2)
H BLANK
HV DET
ABL
V REF
SW Q809
BUFFER Q810
IC804 HVPM
IK PROT
HV ADJ
+B1
+B2
VPR
CN601
+31V
HV REG DET IC806
PRT ADJ
IC806
HD OUT
PROTECT Q811
HV PROT
OVP
H PROTECT Q806
CN500
FROM G BOARD CN602
+144V
+72V
+15V
-15V
+12V
+12V REG IC500
-12V
-12V REG IC501
D (2/2)
(HV REG, HV PROT, H PHASE, D FOCUS, H OSC, V OSC)
CN802 (2/2)
HD STOP
RETRC
V PROT Q409
CN503
NTC
V STAT-
V STAT+
ROTATION
ROTATION+
ROTATION-
CN400
V PROT
V DY+
V DY-
V OUT IC407
XV DY

5-2. FRAME SCHEMATIC DIAGRAM

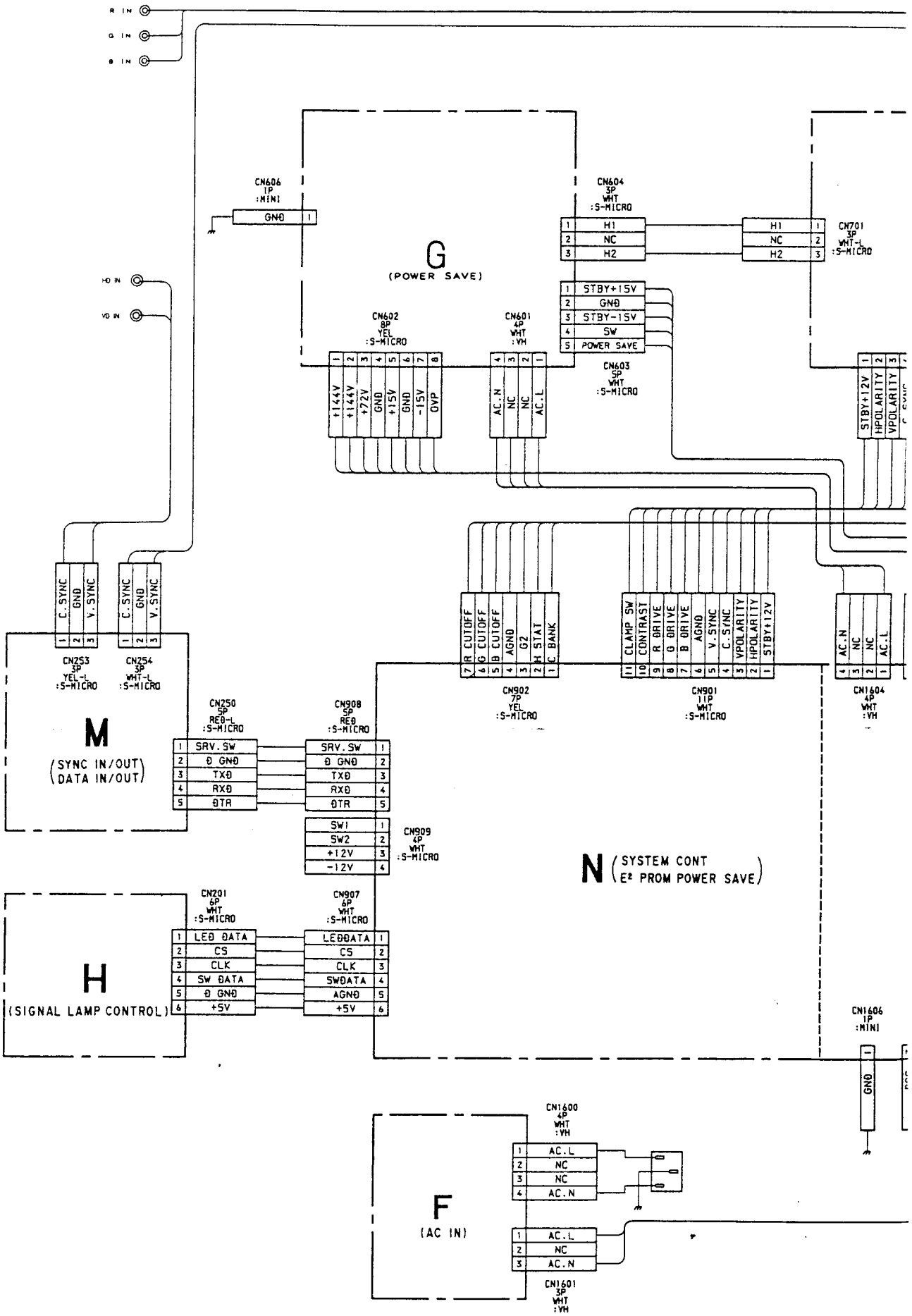

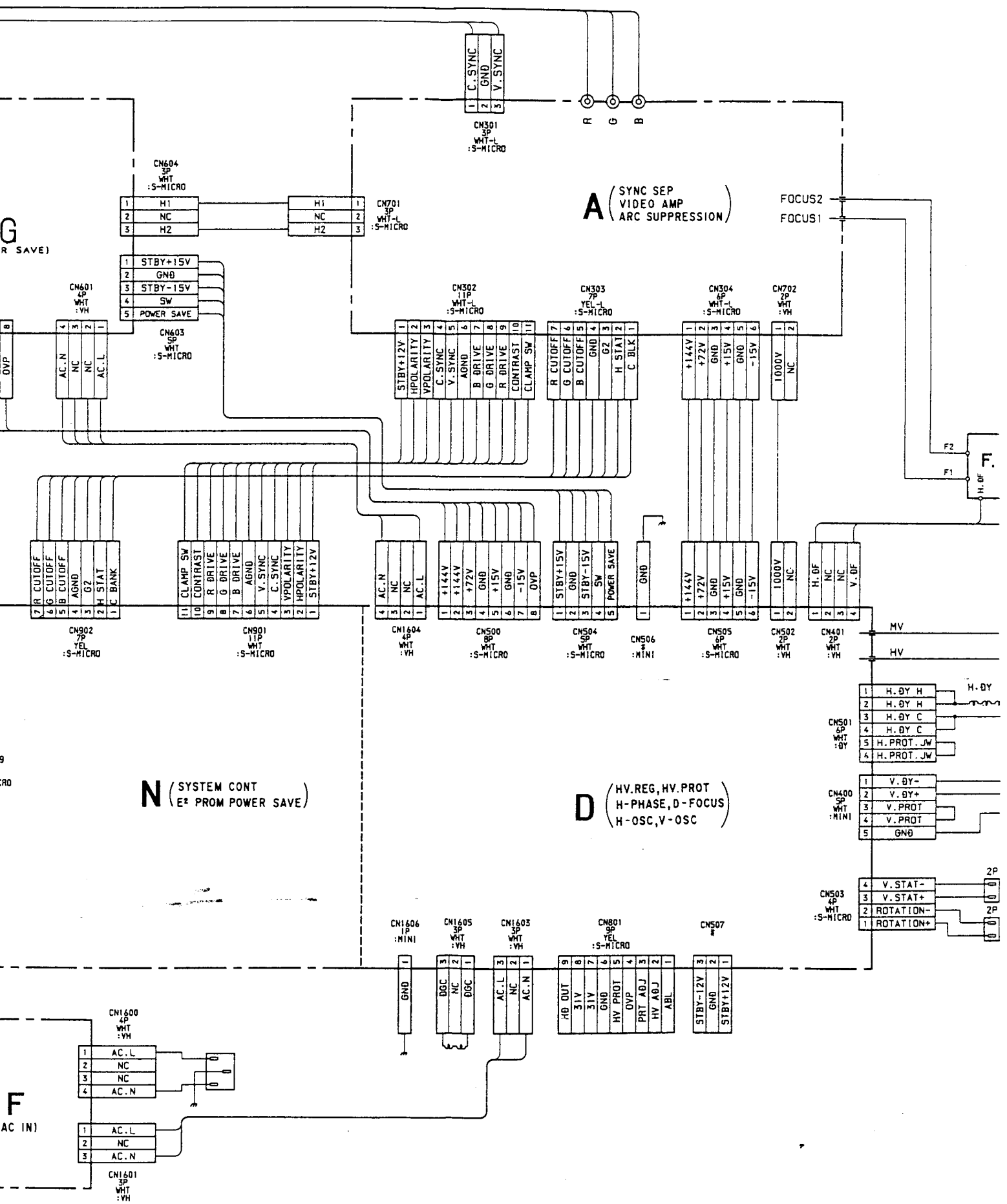
CN301 3P WHT-L :S-MICRO
C.SYNC
GND
V.SYNC
R
G
B
A (SYNC SEP VIDEO AMP ARC SUPPRESSION)
FOCUS2
FOCUS1
CN604 3P WHT :S-MICRO
H1
NC
H2
CN701 3P WHT-L :S-MICRO
STBY+15V
GND
STBY-15V
SW
POWER SAVE
CN603 5P WHT :S-MICRO
CN601 4P WHT :VH
AC.N
NC
NC
AC.L
CN302 11P WHT-L :S-MICRO
STBY+12V
HPOLARITY
VPOLARITY
C.SYNC
V.SYNC
AGND
B DRIVE
G DRIVE
R DRIVE
CONTRAST
CLAMP SW
CN303 7P YEL-L :S-MICRO
R CUTOFF
G CUTOFF
B CUTOFF
GND
G2
H STAT
C BLK
CN304 6P WHT-L :S-MICRO
+144V
+72V
GND
+15V
GND
-15V
CN702 2P WHT :VH
1000V
NC
F2
F1
F.
H.DF
CN902 7P YEL :S-MICRO
CN901 11P WHT :S-MICRO
CN1604 4P WHT :VH
CN500 8P WHT :S-MICRO
CN504 5P WHT :S-MICRO
CN506 # :MINI
CN505 6P WHT :S-MICRO
CN502 2P WHT :VH
CN401 2P WHT :VH
MV
HV
H.DY
CN501 6P WHT :DY
H.DY H
H.DY C
H.PROT.JW
N (SYSTEM CONT E² PROM POWER SAVE)
D (HV.REG,HV.PROT H-PHASE,D-FOCUS H-OSC,V-OSC)
CN400 5P WHT :MINI
V.DY-
V.DY+
V.PROT
V.PROT
GND
CN503 4P WHT :S-MICRO
V.STAT-
V.STAT+
ROTATION-
ROTATION+
2P
CN1606 1P :MINI
CN1605 3P WHT :VH
CN1603 3P WHT :VH
CN801 9P YEL :S-MICRO
CN507 #
DGC
HD OUT
31V
HV PROT
OVP
PRT ADJ
HV ADJ
ABL
STBY-12V
CN1600 4P WHT :VH
F (AC IN)
CN1601 3P WHT :VH

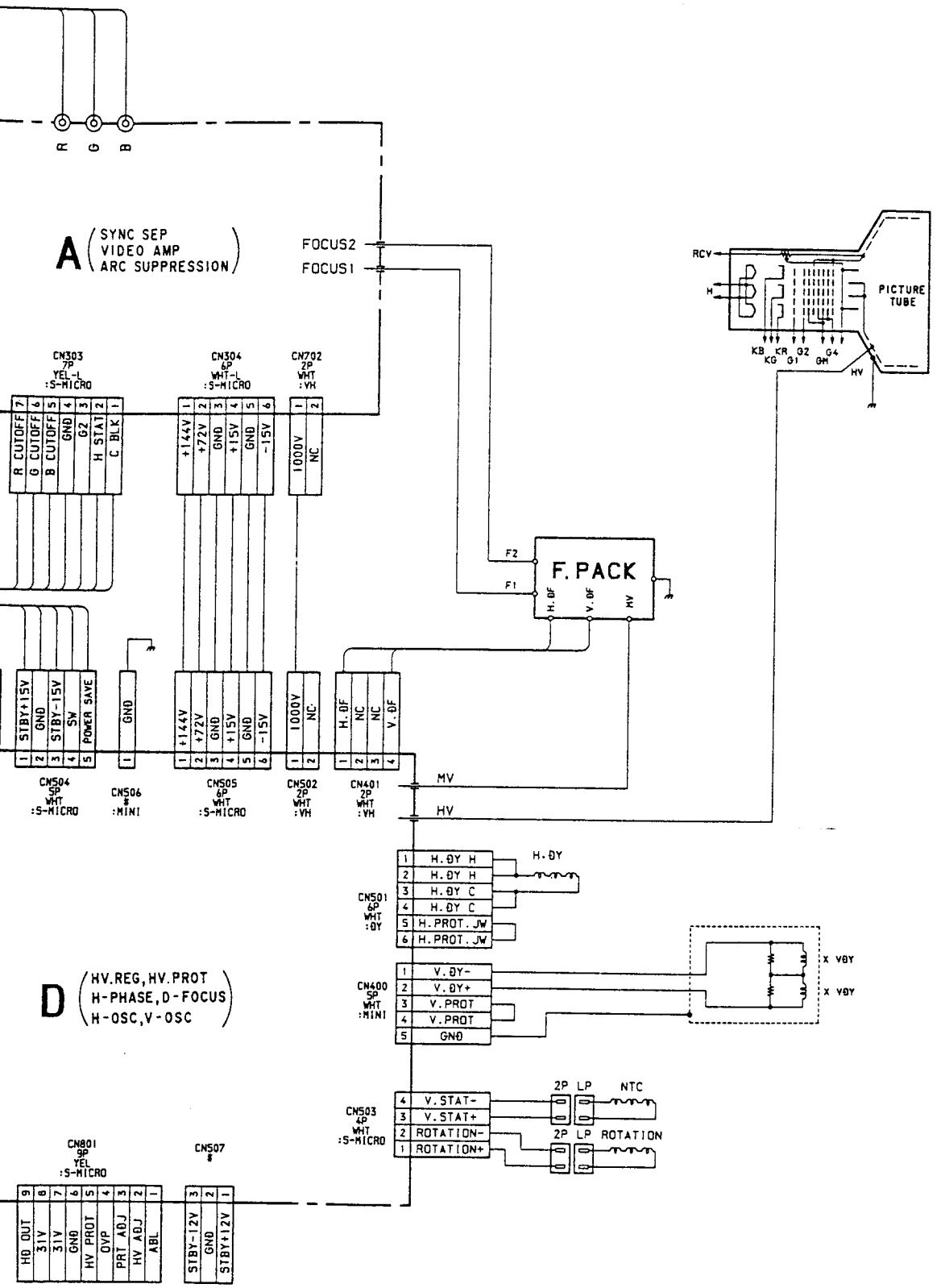

5-3. CIRCUI

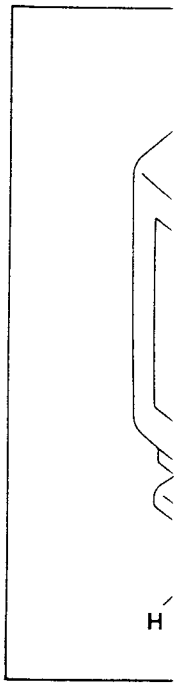

5-4. SCHEMAT

Note:

- All capacitors ar
  50 WV or less are
- Indication of resi
  electrical power,

Pitch: 5 mm
Rating electrical

- All resistors are in
- : nonflam
- : fusible
- : interna
- : panel c
- All variable and
  B, unless otherwis
- : earth-gr
- : earth-ch
- All voltages are in
- Readings are take
- Readings are take
- Voltage variation
  tolerances.
- * : Can no
- Circled numbers a
- : B + bu
- : B − bu

5-3. CIRCUIT BOARDS LOCATION

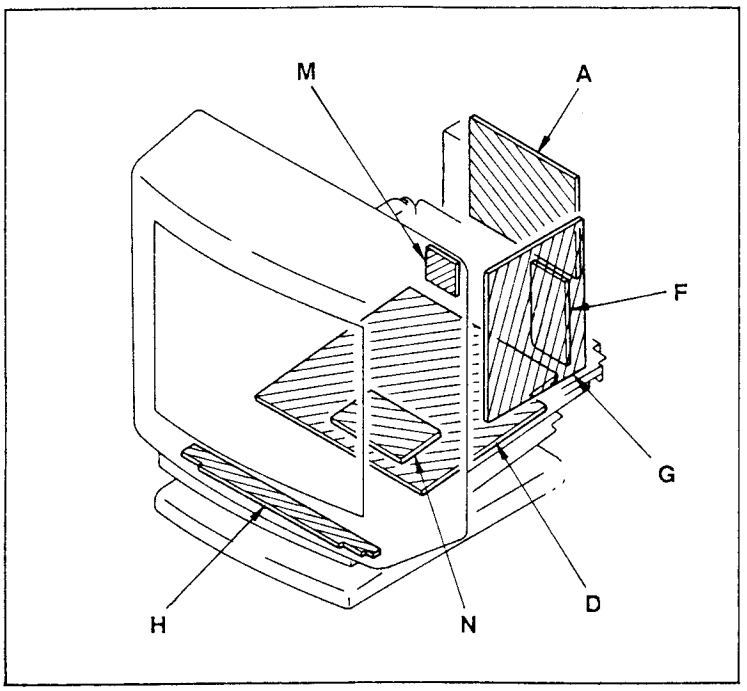

5-4. SCHEMATIC DIAGRAMS AND PRINTED WIRING BOARDS

Note:

- All capacitors are in μF unless otherwise noted. pF: μμF 50 WV or less are not indicated except for electrolytic.
- Indication of resistance, which does not have one for rating electrical power, is as follows.

Pitch: 5 mm
Rating electrical power 1/4 W (CHIP : 1/10 W)

- All resistors are in ohms.
- : nonflammable resistor.
- : fusible resistor.
- △ : internal component.
- ▭ : panel designation, and adjustment for repair.
- All variable and adjustable resistors have characteristic curve B, unless otherwise noted.
- ⊥ : earth-ground.
- ⏚ : earth-chassis.
- All voltages are in V.
- Readings are taken with a 10 MΩ digital multimeter.
- Readings are taken with a color-bar signal input.
- Voltage variations may be noted due to normal production tolerances.
- * : Can not be measured.
- Circled numbers are waveform references.
- ━━━ : B + bus.
- ▬ ▬ ▬ : B − bus.

Reference information

RESISTOR	: RN	METAL FILM
	: RC	SOLID
	: FPRD	NONFLAMMABLE CARBON
	: FUSE	NONFLAMMABLE FUSIBLE
	: RW	NONFLAMMABLE WIREWOUND
	: RS	NONFLAMMABLE METAL OXIDE
	: RB	NONFLAMMABLE CEMENT
COIL	: LF-8L	MICRO INDUCTOR
CAPACITOR	: TA	TANTALUM
	: PS	STYROL
	: PP	POLYPROPYLENE
	: PT	MYLAR
	: MPS	METALIZED POLYESTER
	: MPP	METALIZED POLYPROPYLENE
	: ALB	BIPOLAR
	: ALT	HIGH TEMPERATURE
	: ALR	HIGH RIPPLE

Note: The components identified by shading and mark ⚠ are critical for safety. Replace only with part number specified.

Note: Les composants identifiés par un tramé et une marque ⚠ sont critiques pour la sécurité. Ne les remplacer que par une pièce portant le numéro spécifié.

F [AC IN]

– F Board –

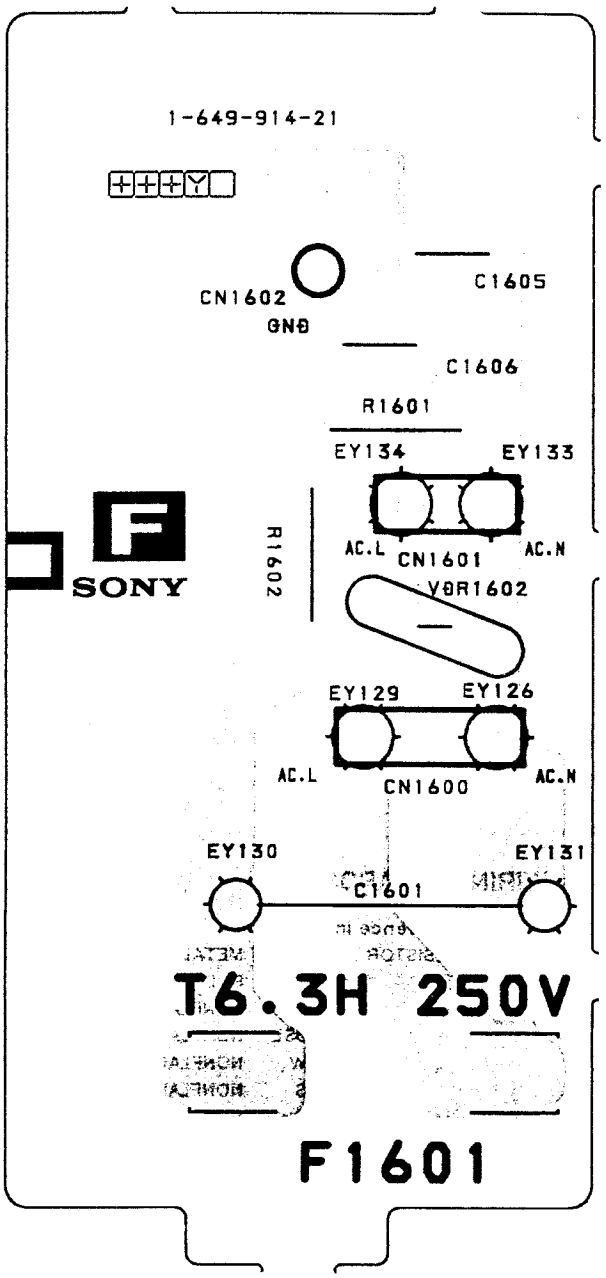

• D B

IC401
IC404
IC406
IC407
IC408
IC409
IC410
IC500
IC501
IC502
IC503
IC505
IC506
IC801
IC802
IC803
IC804
IC806
TRAN
Q402
Q403
Q404
Q406
Q408
Q409
Q410
Q411
Q412
Q506
Q511
Q512
Q513
Q514
Q515
Q517
Q518
Q519
Q520
Q521
Q522
Q801
Q802
Q803
Q804
Q805
Q806
Q807
Q809
Q810
Q811
Q812
Q1501
Q1603
Q1606
Q1607

• **D BOARD**

IC		DIODE			
IC401	B – 1	D404	G – 1	D815	F – 6
IC404	G – 1	D405	G – 2	D816	E – 7
IC406	F – 2	D406	A – 1	D817	E – 7
IC407	A – 3	D407	F – 3	D819	D – 7
IC408	B – 2	D408	A – 3	D820	D – 6
IC409	B – 3	D409	A – 1	D821	E – 7
IC410	B – 3	D410	A – 2	D823	D – 6
IC500	B – 4	D411	F – 3	D824	F – 6
IC501	B – 3	D412	A – 2	D825	G – 7
IC502	E – 1	D413	A – 3	D826	D – 3
IC503	C – 1	D414	A – 3	D827	D – 7
IC505	G – 3	D415	F – 1	D828	C – 6
IC506	C – 3	D416	F – 2	D829	E – 7
IC801	C – 7	D417	F – 2	D1501	C – 3
IC802	D – 6	D418	G – 1	D1502	C – 3
IC803	E – 6	D419	F – 1	D1503	C – 3
IC804	D – 7	D420	F – 2	D1504	D – 2
IC806	D – 6	D421	E – 6	D1505	D – 2
		D422	G – 1	D1624	C – 6
TRANSISTOR		D425	B – 2	D1629	B – 5
		D501	E – 1		
Q402	F – 1	D502	C – 5		
Q403	F – 1	D503	G – 4		
Q404	F – 1	D504	G – 4		
Q406	G – 2	D505	G – 5		
Q408	F – 3	D506	G – 4		
Q409	A – 1	D507	F – 5		
Q410	F – 2	D508	F – 4		
Q411	F – 2	D509	G – 4		
Q412	F – 2	D510	F – 5		
Q506	F – 1	D511	G – 6		
Q511	G – 4	D512	D – 2		
Q512	G – 5	D513	C – 6		
Q513	D – 2	D514	E – 4		
Q514	D – 2	D515	D – 1		
Q515	E – 3	D516	G – 5		
Q517	F – 1	D517	D – 1		
Q518	C – 6	D518	D – 1		
Q519	C – 6	D519	D – 2		
Q520	D – 3	D520	E – 1		
Q521	C – 3	D521	D – 1		
Q522	C – 2	D522	E – 1		
Q801	C – 8	D523	E – 3		
Q802	C – 8	D524	E – 1		
Q803	D – 8	D801	C – 8		
Q804	F – 7	D802	C – 7		
Q805	C – 7	D803	C – 7		
Q806	D – 3	D805	C – 6		
Q807	C – 6	D806	D – 7		
Q809	D – 7	D807	D – 8		
Q810	D – 7	D808	E – 7		
Q811	D – 6	D809	E – 6		
Q812	B – 8	D810	D – 7		
Q1501	D – 4	D811	E – 6		
Q1603	C – 4	D812	D – 8		
Q1606	C – 6	D813	D – 8		
Q1607	B – 4	D814	E – 6		

D [HV. REG, HV. PROT
H-PHASE, D-FOCUS
H-OSC, V-OSC]

– D Board –

	F – 6
	E – 7
	E – 7
	D – 7
	D – 6
	E – 7
	D – 6
	F – 6
	G – 7
	D – 3
	D – 7
	C – 6
	E – 7
1	C – 3
2	C – 3
3	C – 3
4	D – 2
5	D – 2
4	C – 6
9	B – 5

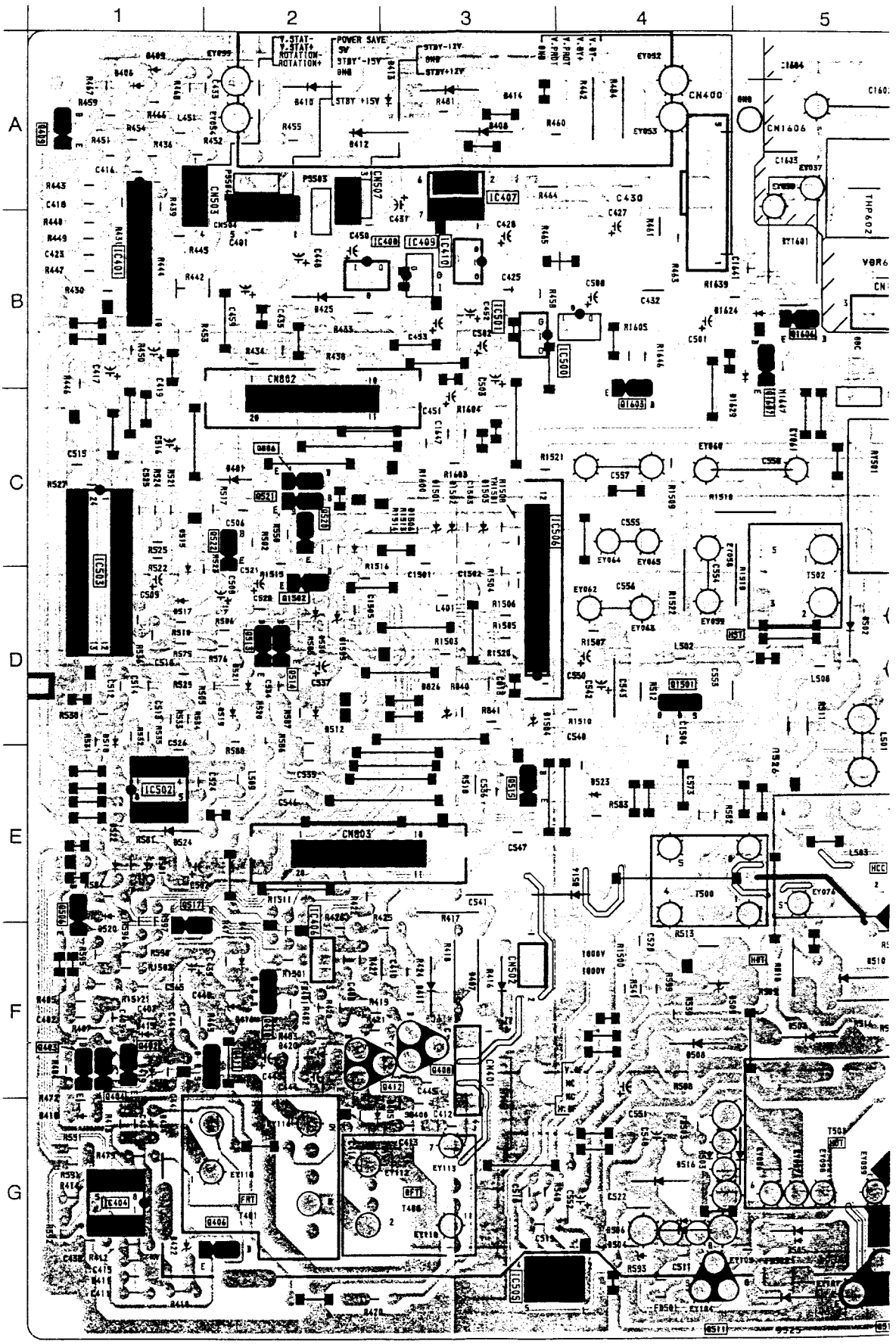

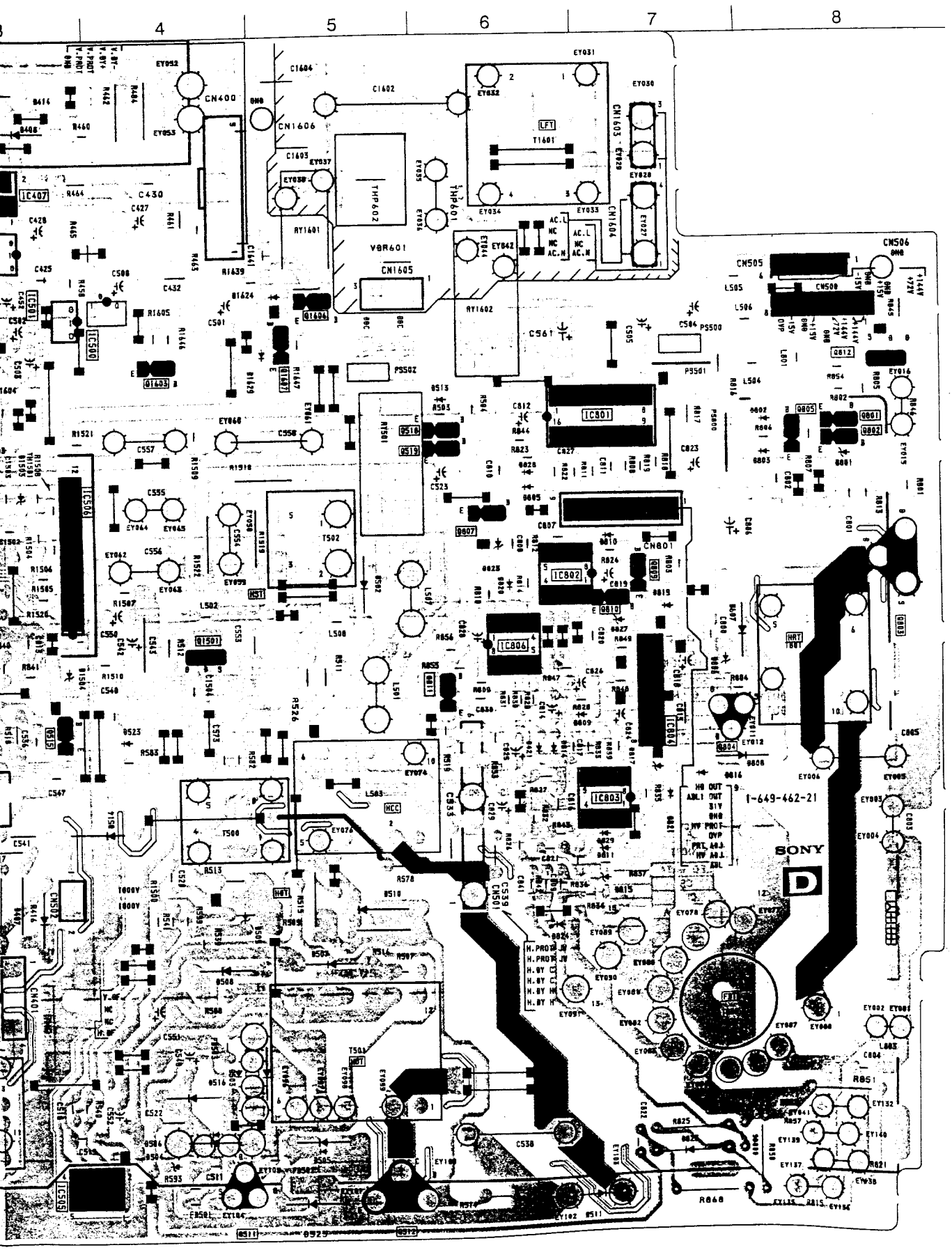
4
5
6
7
8
CN400
CN1606
CN1603
CN1604
CN1605
CN506
CN505
CN509
CN801
IC801
IC802
IC803
IC804
IC407
IC501
IC506
IC505
T1601
T501
T502
T500
THP602
THP601
VOR601
RY1601
RY1602
PS500
PS501
PS502
1-649-462-21
SONY

(1) Schematic Diagrams of D, F Boards

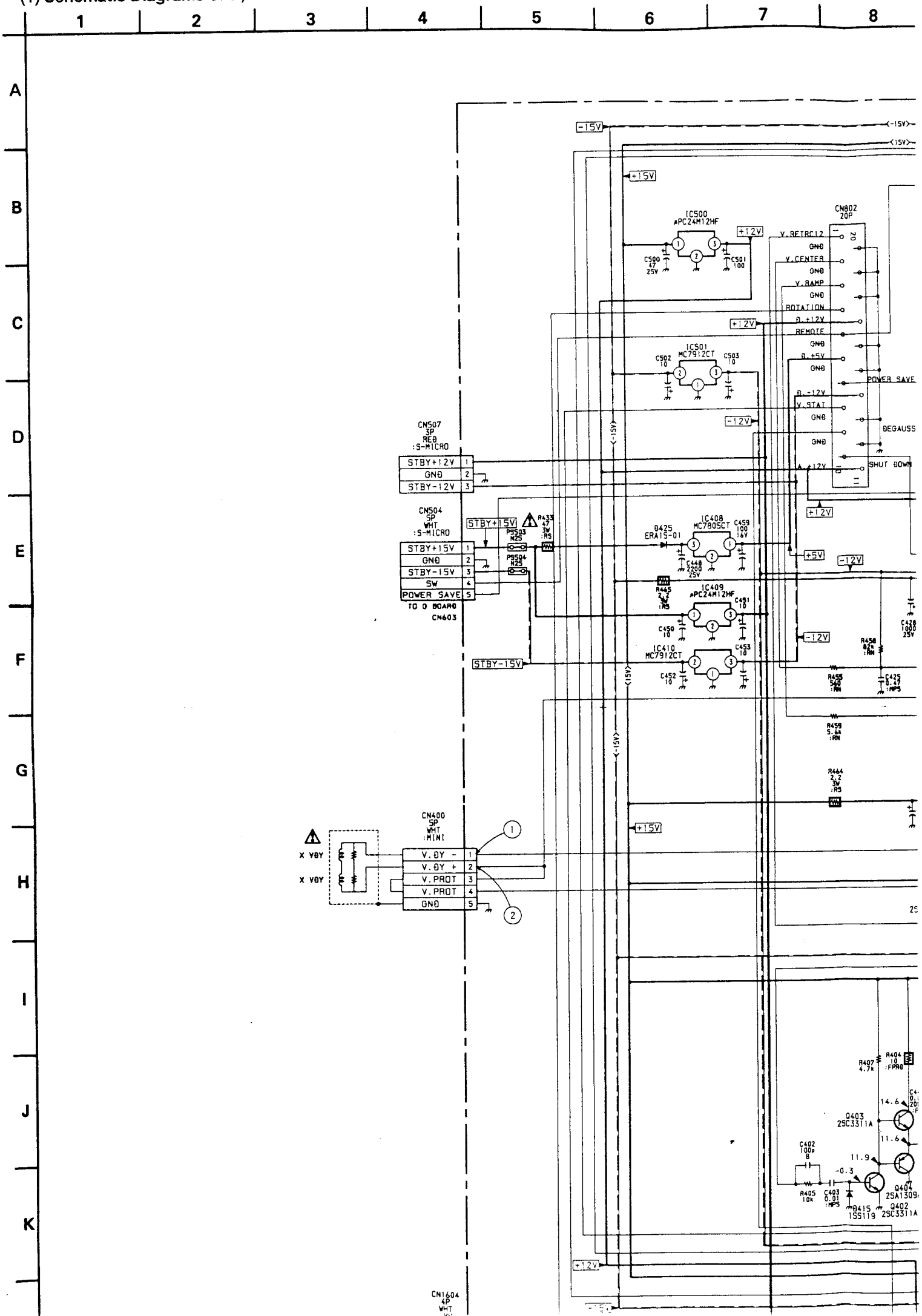

TABLE OF CONTENTS

Section	Title	Page
1. DISASSEMBLY		
1-1.	Cabinet and EMI Shield Removal	5
1-2.	G Block Assy Removal	5
1-3.	A Block Assy Removal	6
1-4.	Connector Panel Assy Removal	6
1-5.	Chassis Assy Removal	7
1-6.	Front Block Assy Removal	7
1-7.	Bezel Assy Removal	8
1-8.	Picture Tube Removal	8
1-9.	Wiring Harness Layout	9
2. SAFETY RELATED ADJUSTMENT		10
3. ADJUSTMENTS		11
4. TROUBLESHOOTING		13
5. DIAGRAMS		
5-1.	Block Diagrams	14
5-2.	Frame Schematic Diagram	19
5-3.	Circuit Boards Location	21
5-4.	Schematic Diagrams and Printed Wiring Boards	
(1)	Schematic Diagrams of D, F Boards	25
(2)	Schematic Diagram of A Board	29
(3)	Schematic Diagram of N Board	39
(4)	Schematic Diagrams of H, G and M Boards	43
5-5.	Semiconductors	51
6. EXPLODED VIEWS		
6-1.	Chassis	53
6-2.	Picture Tube	54
6-3.	Kit	55
6-4.	Accessories and Packing Materials	56
7. ELECTRICAL PARTS LIST		57

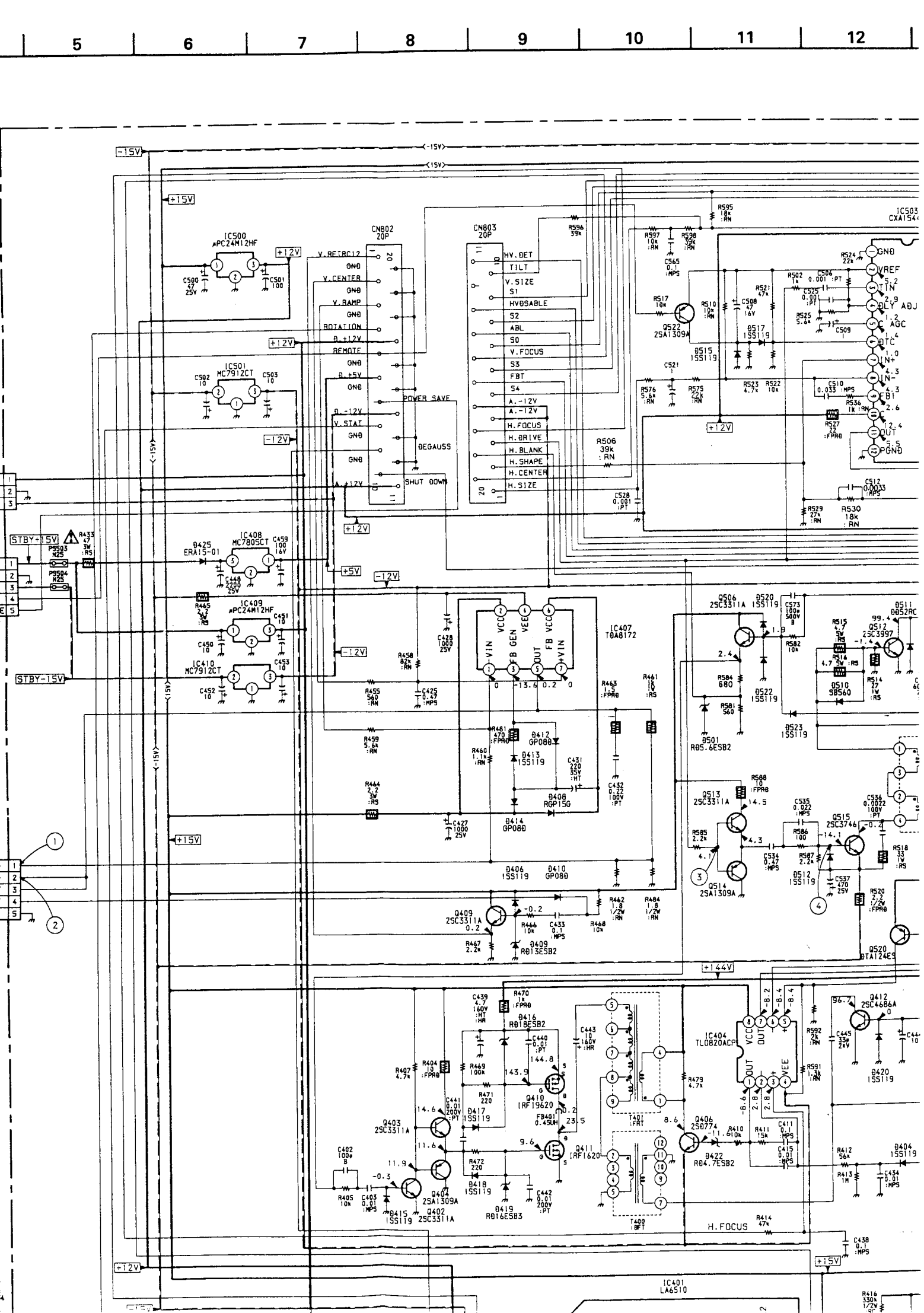
5
6
7
8
9
10
11
12
IC500
μPC24M12HF
IC501
MC7912CT
IC408
MC780SCT
IC409
μPC24M12HF
IC410
MC7912CT
CN802
20P
CN803
20P
V.RETRC12
V.CENTER
V.RAMP
ROTATION
REMOTE
V.STAT
POWER SAVE
DEGAUSS
SHUT DOWN
HV.DET
TILT
V.SIZE
S1
HVDSABLE
S2
ABL
S0
V.FOCUS
S3
FBT
S4
H.FOCUS
H.DRIVE
H.BLANK
H.SHAPE
H.CENTER
H.SIZE
IC503
CXA1544
IC407
TDA8172
IC404
TL0820ACP
IC401
LA6510
T401
T400
STBY+15V
STBY-15V
H.FOCUS

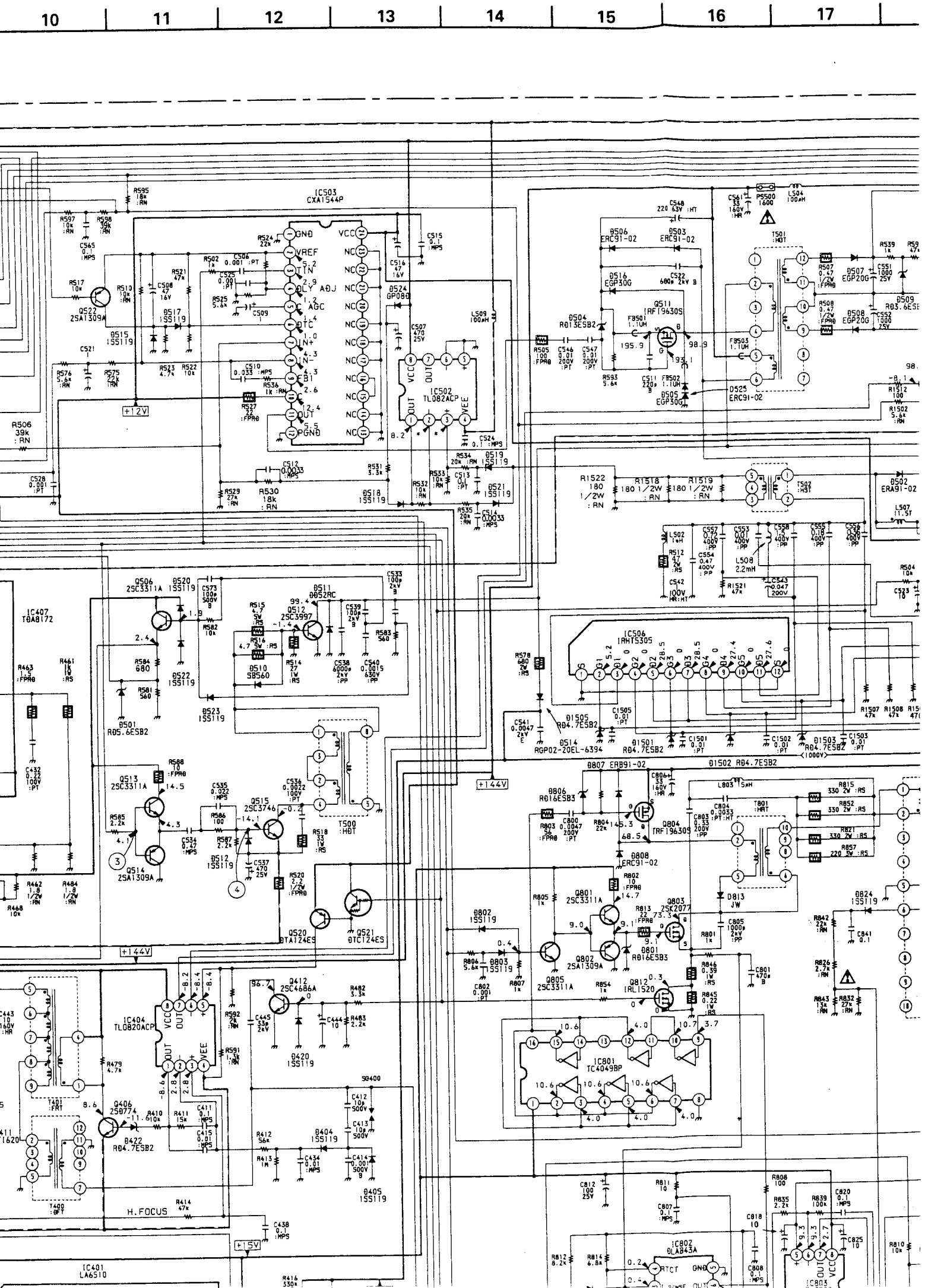
10
11
12
13
14
15
16
17
IC503
CXA1544P
IC502
TL082ACP
IC506
IRHT5305
IC407
TDA8172
IC404
TL0820ACP
IC801
TC4049BP
IC802
DLA843A
IC401
LA6510
Q511
IRF19630S
Q804
IRF19630S
Q801
IRL1520
Q812
IRL1520
Q803
2SK2077
Q506
2SC3311A
Q513
2SC3311A
Q514
2SA1309A
Q515
2SC3746
Q512
2SC3997
Q520
DTA124ES
Q521
DTC124ES
Q412
2SC4686A
Q406
2SD774
Q422
RD4.7ESB2
Q522
2SA1309A
Q501
RD5.6ESB2
Q514
RGP02-20EL-6394
Q505
EGP30G
Q525
ERC91-02
T500
HOT
T501
HOT
T502
HST
T400
BFT
T401
FRT
T801
HRT
H.FOCUS
+12V
+144V
+5V

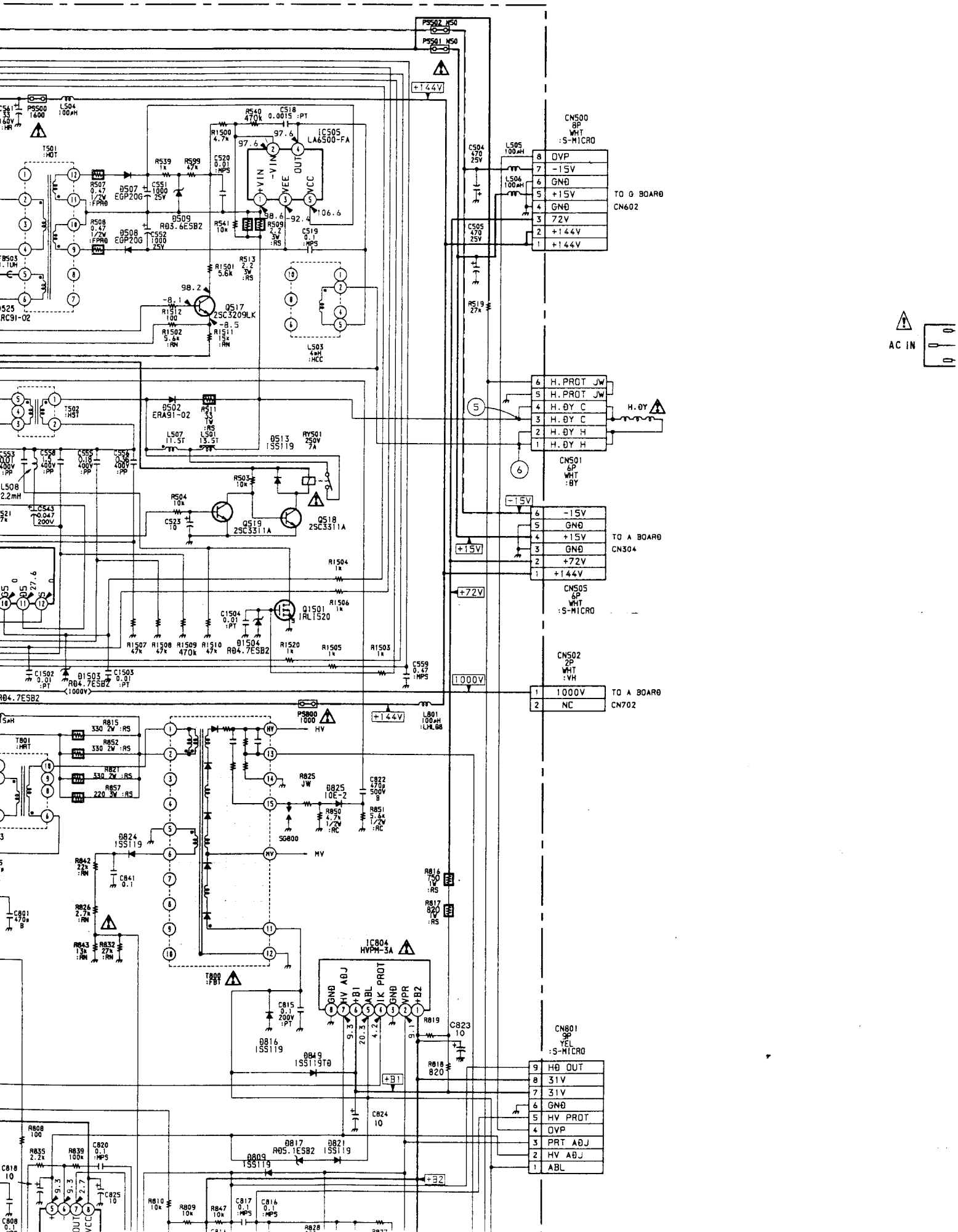
CN500
8P
WHT
:S-MICRO
8 OVP
7 -15V
6 GND
5 +15V
4 GND
3 72V
2 +144V
1 +144V
TO G BOARD
CN602
CN501
6P
WHT
:BY
6 H.PROT JW
5 H.PROT JW
4 H.BY C
3 H.BY C
2 H.BY H
1 H.BY H
H.BY
CN505
6P
WHT
:S-MICRO
6 -15V
5 GND
4 +15V
3 GND
2 +72V
1 +144V
TO A BOARD
CN304
CN502
2P
WHT
:VH
1 1000V
2 NC
TO A BOARD
CN702
CN801
9P
YEL
:S-MICRO
9 HD OUT
8 31V
7 31V
6 GND
5 HV PROT
4 OVP
3 PRT ADJ
2 HV ADJ
1 ABL
AC IN
IC505
LA6500-FA
IC804
HVPM-3A
Q517
2SC3209LK
Q519
2SC3311A
Q518
2SC3311A
Q501
IRLI520
+144V
+15V
-15V
+72V
1000V
+B1
+B2
HV

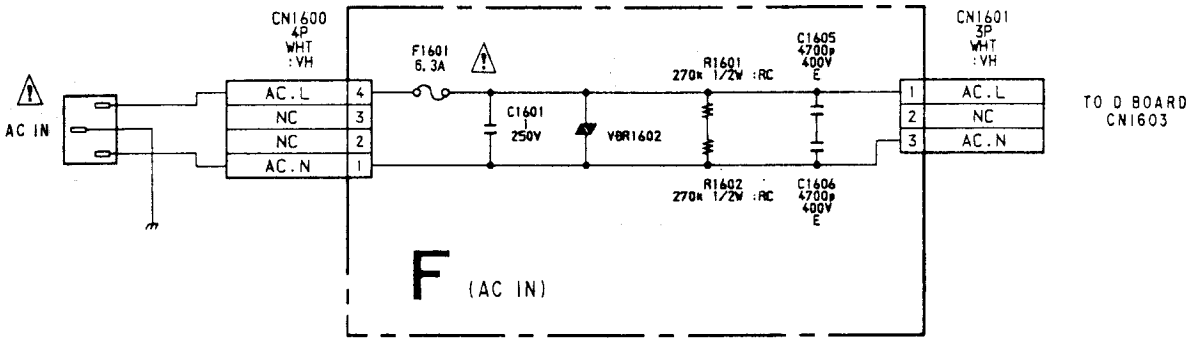

D BOARD WAVEFORMS

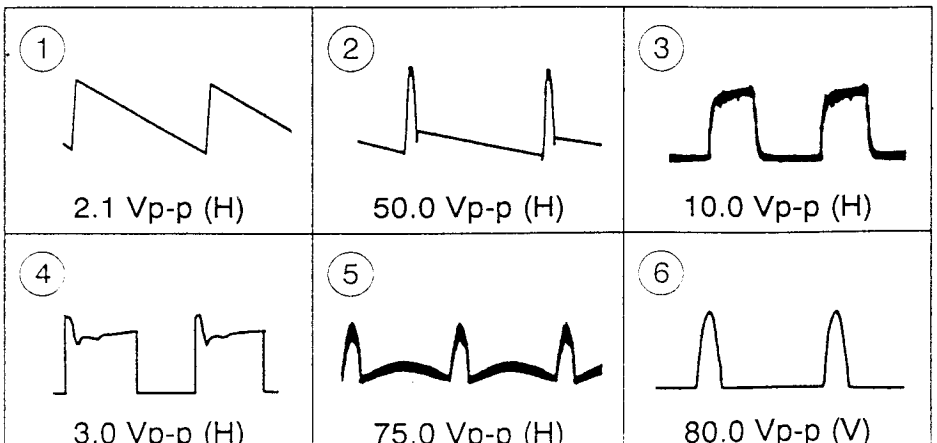

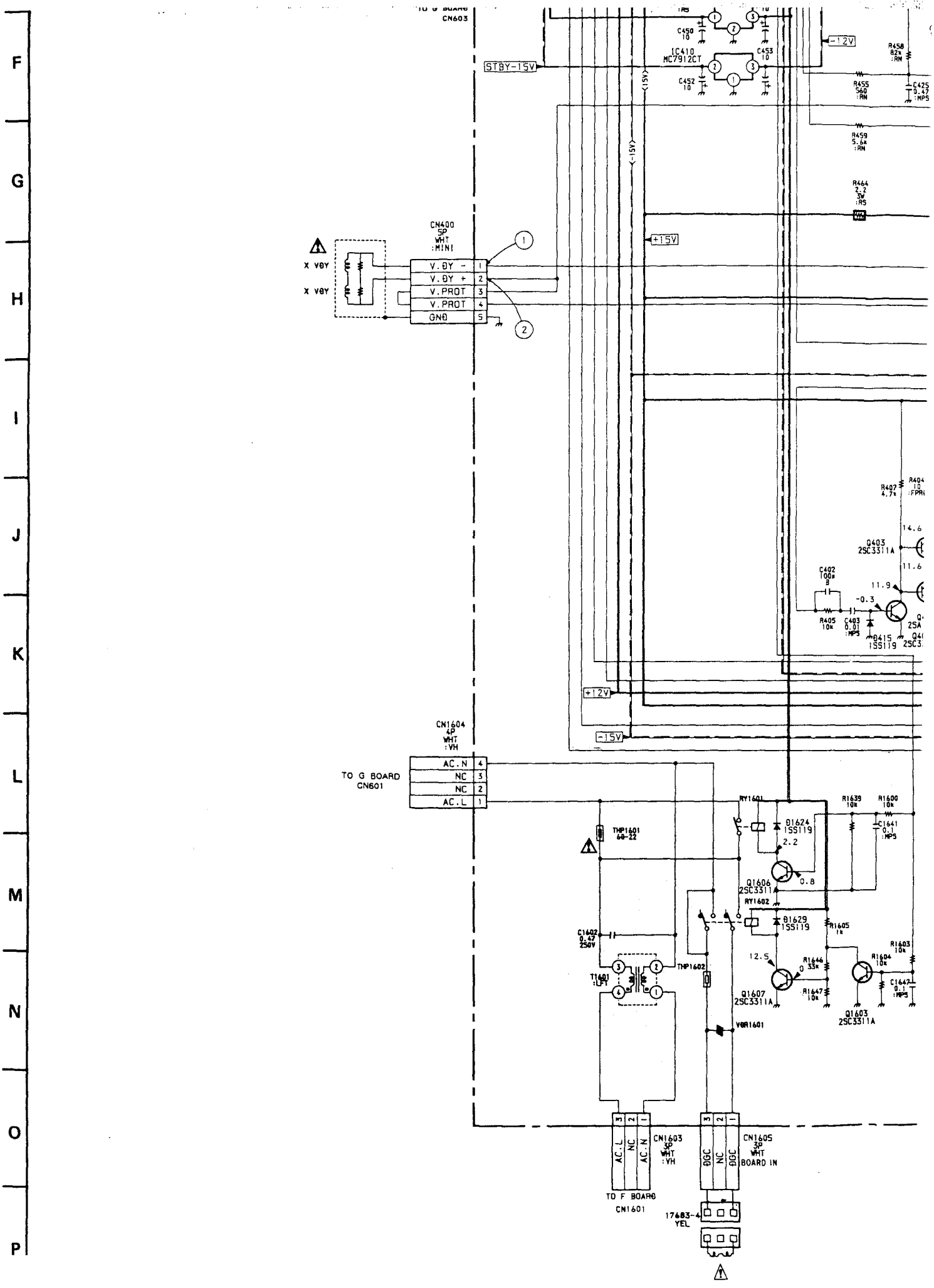
TO G BOARD
CN603
STBY-15V
IC410
MC7912CT
C450
10
C452
10
C453
10
-12V
R458
82k
:RN
R455
560
:RN
R459
5.6k
:RN
R464
2.2
3W
:RS
+15V
-15V
CN400
5P
WHT
:MINI
X VOY
X VOY
V.OY -
V.OY +
V.PROT
V.PROT
GNO
R407
4.7k
R404
10
:FPR
Q403
2SC3311A
C402
100p
B
R405
10k
C403
0.01
:MPS
D415
1SS119
+12V
-15V
CN1604
4P
WHT
:VH
TO G BOARD
CN601
AC.N
NC
NC
AC.L
THP1601
60-22
RY1601
D1624
1SS119
R1639
10k
R1600
10k
C1641
0.1
:MPS
Q1606
2SC3311
RY1602
D1629
1SS119
R1605
1k
C1602
0.47
250V
T1601
:LPT
THP1602
Q1607
2SC3311A
R1646
0.33k
R1647
10k
R1604
10k
R1603
10k
C1647
0.1
:MPS
Q1603
2SC3311A
VOR1601
CN1603
3P
WHT
:VH
AC.L
NC
AC.N
TO F BOARD
CN1601
CN1605
3P
WHT
BOARD IN
OGC
NC
OGC
17683-4
YEL

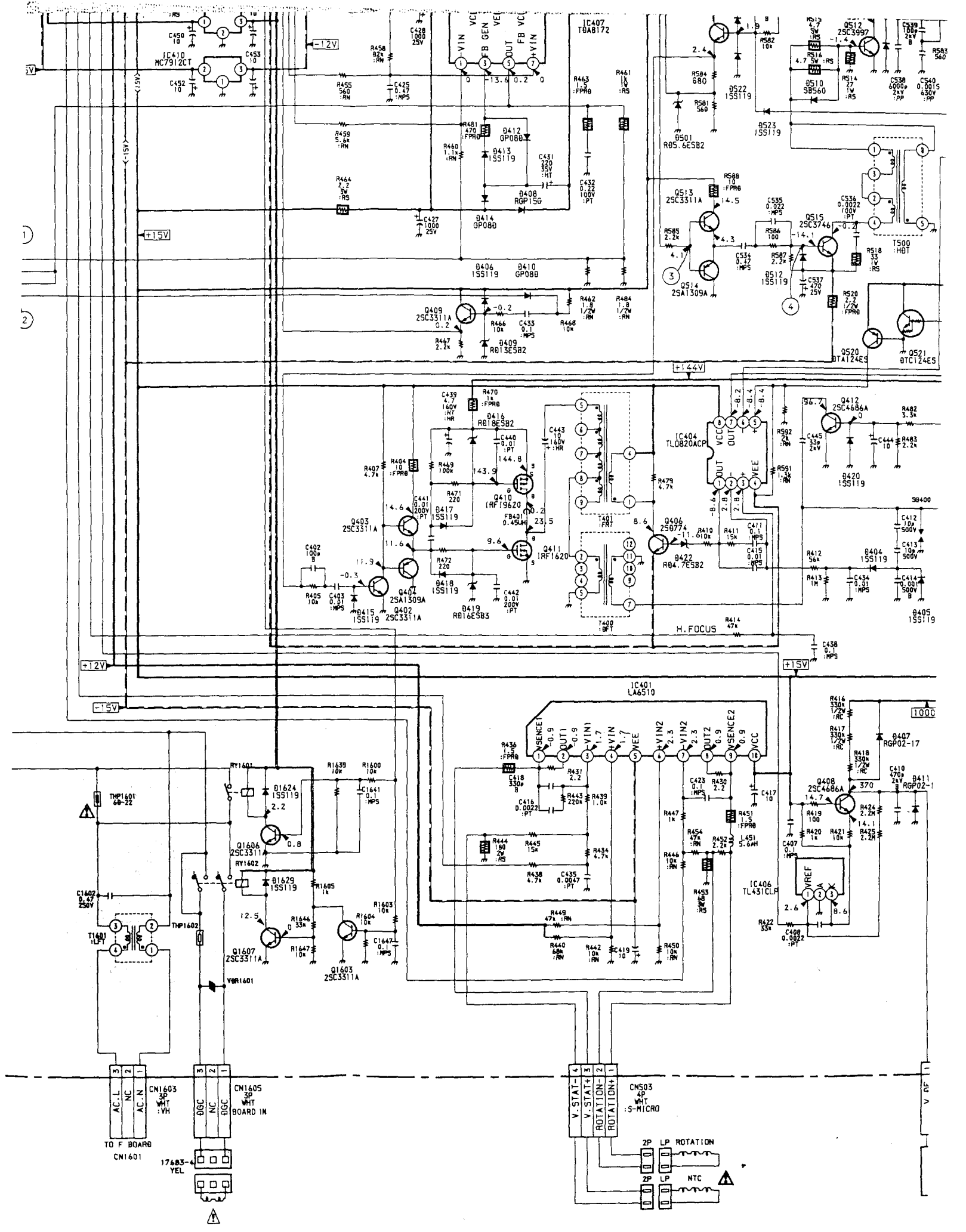
IC410 MC7912CT
IC407 TDA8172
IC404 TL0820ACP
IC401 LA6510
IC406 TL431CLP
Q512 2SC3997
Q513 2SC3311A
Q514 2SA1309A
Q515 2SC3746
Q520 BTA124ES
Q521 BTC124ES
Q409 2SC3311A
Q403 2SC3311A
Q404 2SA1309A
Q402 2SC3311A
Q410 IRF1620
Q411 IRF1620
Q406 2SD774
Q412 2SC4686A
Q408 2SC4686A
Q1606 2SC3311A
Q1607 2SC3311A
Q1603 2SC3311A
T500 :HOT
T401 :FRT
T400 :BFT
T1601 :LPT
H.FOCUS
+144V
+12V
-12V
+15V
-15V
CN1603 3P WHT :VH
CN1605 3P WHT BOARD IN
CN503 4P WHT :S-MICRO
TO F BOARD CN1601
17683-4 YEL
2P LP ROTATION
2P LP NTC

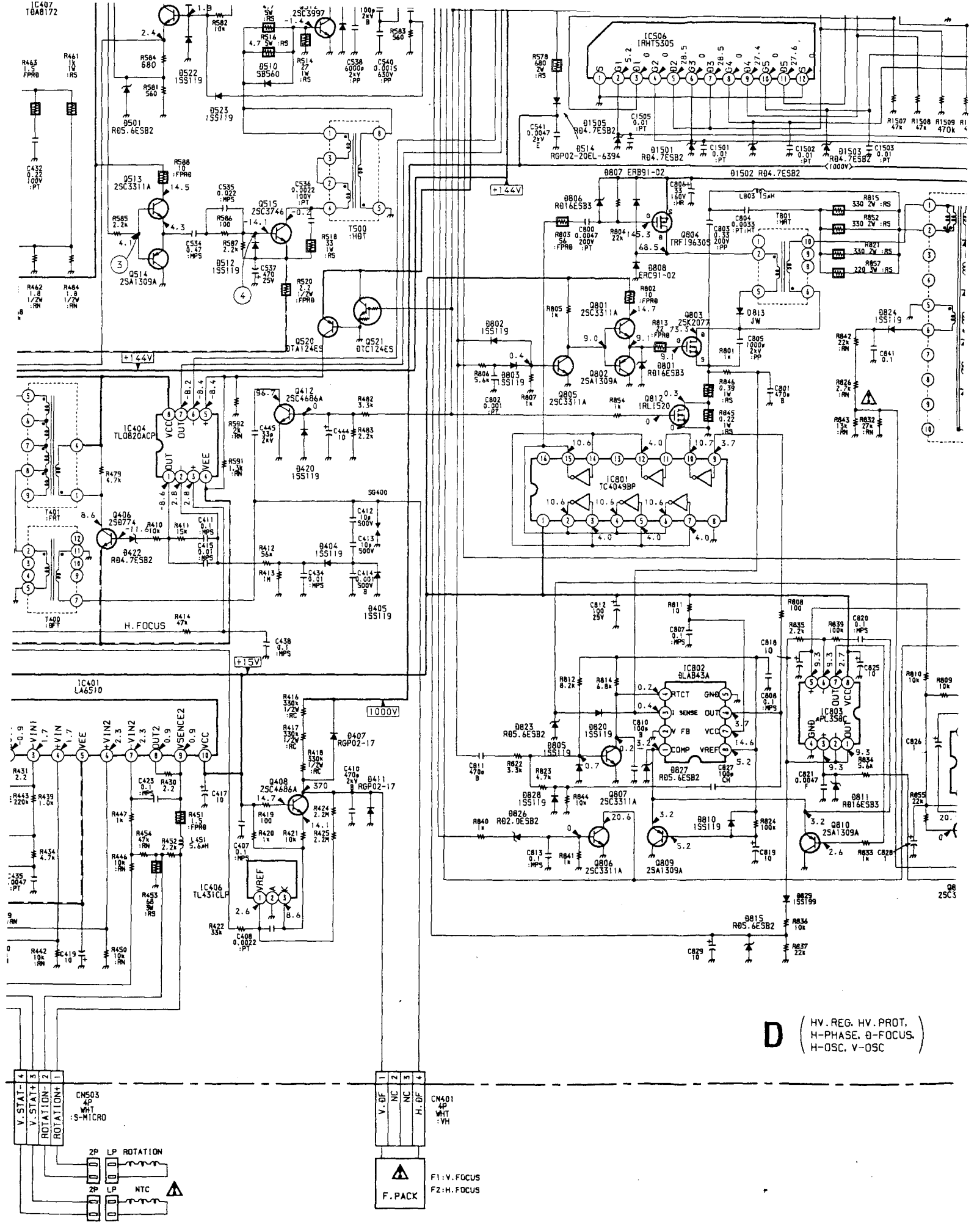
IC407 TDA8172
IC506 IRHT5305
IC404 TL0820ACP
IC401 LA6510
IC406 TL431CLP
IC801 TC4049BP
IC802 BLAB43A
IC803 APL358C
T500 :HOT
T801 :HRT
T401 :FRT
T400 :BFT
+144V
+15V
1000V
H.FOCUS
D
HV.REG. HV.PROT.
H-PHASE. B-FOCUS.
H-OSC. V-OSC
CN503
4P
WHT
:S-MICRO
V.STAT-
V.STAT+
ROTATION-
ROTATION+
2P LP ROTATION
2P LP NTC
CN401
4P
WHT
:VH
V.DF
NC
NC
H.DF
F.PACK
F1:V.FOCUS
F2:H.FOCUS

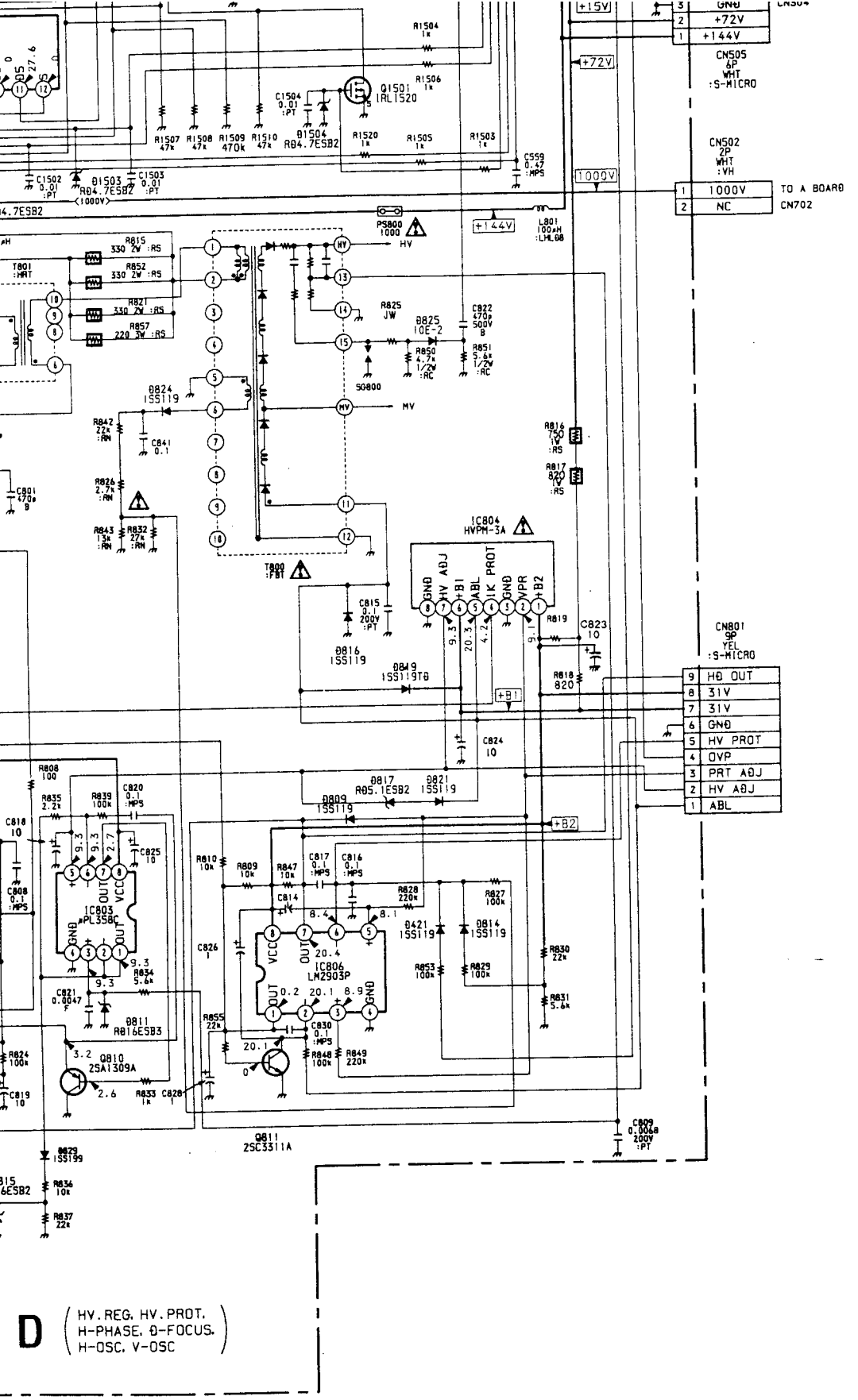

D (HV. REG. HV. PROT. H-PHASE. D-FOCUS. H-OSC. V-OSC)

D BOARD WAVEFORMS

1 2.1 Vp-p (H)	2 50.0 Vp-p (H)	3 10.0 Vp-p (H)
4 3.0 Vp-p (H)	5 75.0 Vp-p (H)	6 80.0 Vp-p (V)

D Board IC407 TDA8172

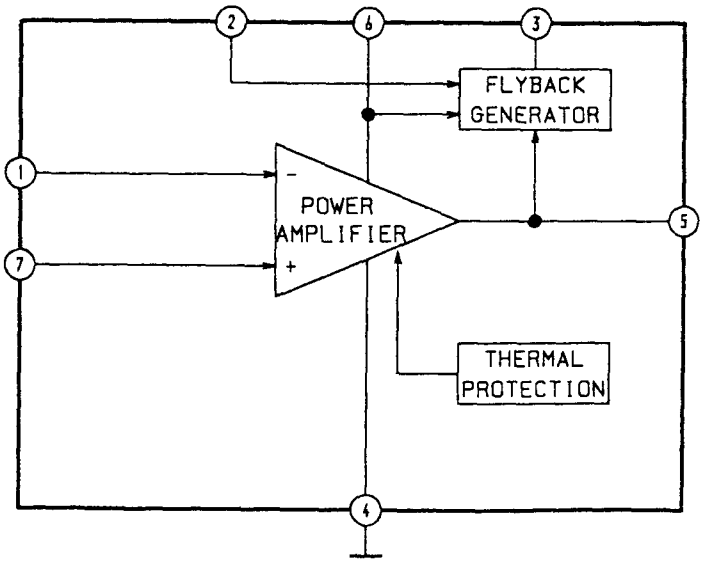

(2) Schematic Diagram of A Board

A Board IC001 PRE-1

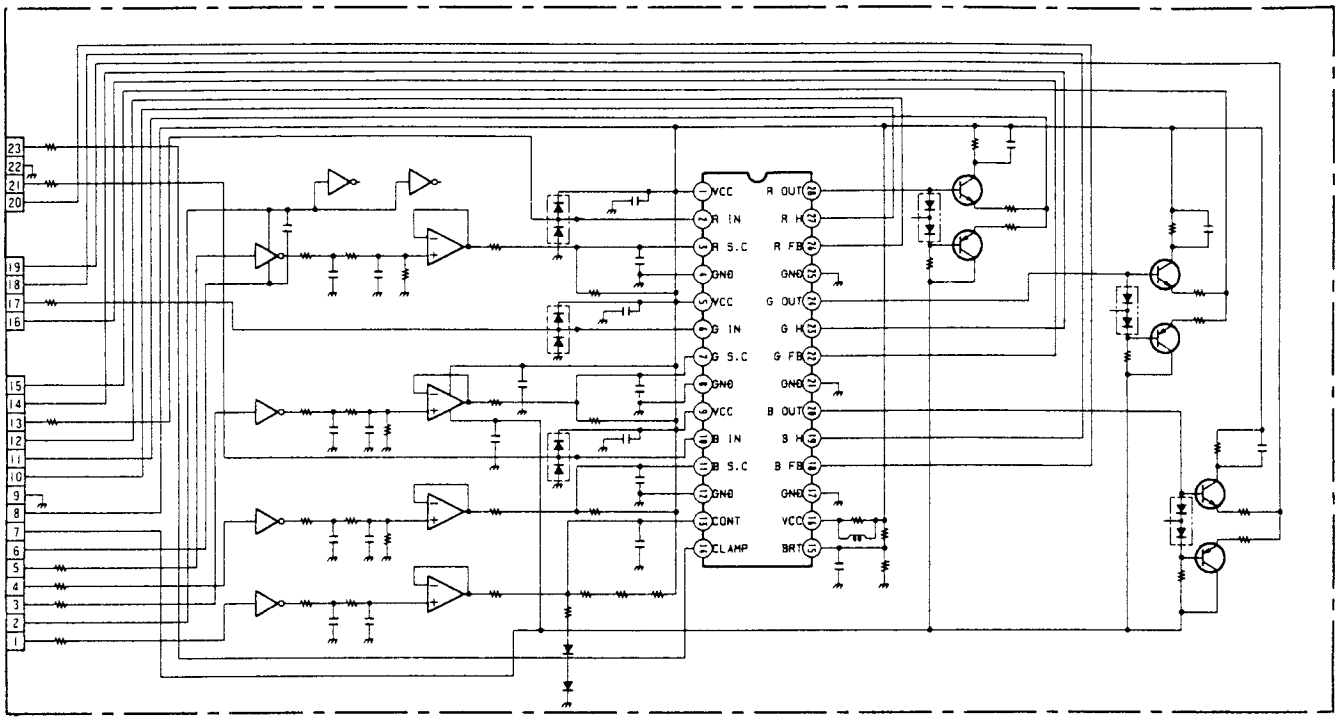

R IN
G IN
B IN

A Board IC005 NJM78L05A

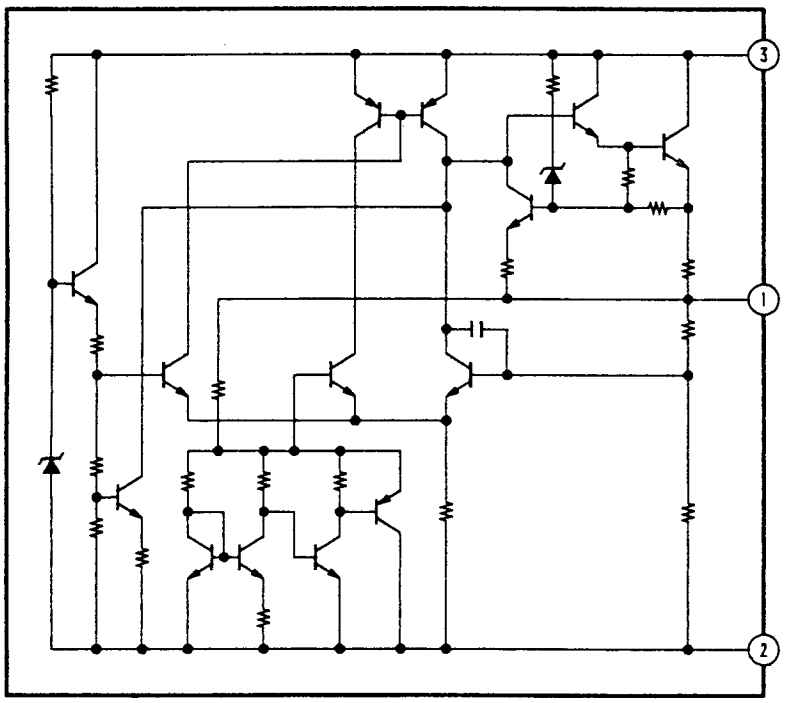

A BOARD WAVEFORMS

1 1.0 Vp-p (H)	2 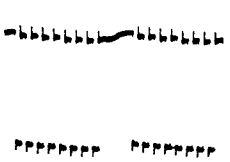 45.0 Vp-p (H)	3 1.0 Vp-p (H)

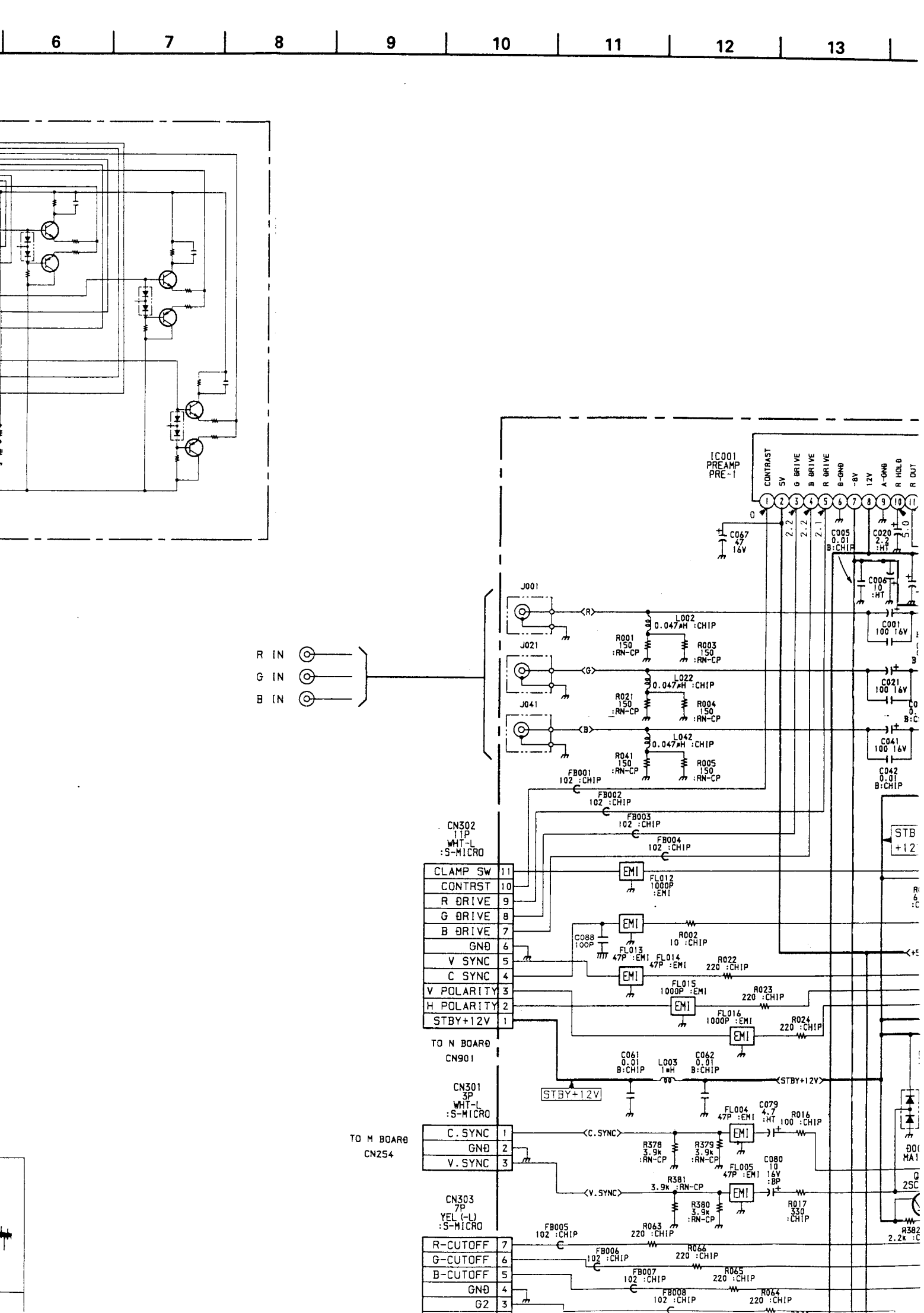
6
7
8
9
10
11
12
13
IC001
PREAMP
PRE-1
CONTRAST
5V
G DRIVE
B DRIVE
R DRIVE
B-GND
-8V
12V
A-GND
R HOLD
R OUT
C067
47
16V
C005
0.01
B:CHIP
C020
2.2
:HT
C006
10
:HT
C001
100 16V
C021
100 16V
C041
100 16V
C042
0.01
B:CHIP
J001
J021
J041
R IN
G IN
B IN
L002
0.047μH :CHIP
L022
0.047μH :CHIP
L042
0.047μH :CHIP
R001
150
:RN-CP
R003
150
:RN-CP
R021
150
:RN-CP
R004
150
:RN-CP
R041
150
:RN-CP
R005
150
:RN-CP
FB001
102 :CHIP
FB002
102 :CHIP
FB003
102 :CHIP
FB004
102 :CHIP
CN302
11P
WHT-L
:S-MICRO
CLAMP SW
CONTRST
R DRIVE
G DRIVE
B DRIVE
GND
V SYNC
C SYNC
V POLARITY
H POLARITY
STBY+12V
TO N BOARD
CN901
FL012
1000P
:EMI
C088
100P
FL013
47P :EMI
FL014
47P :EMI
R002
10 :CHIP
R022
220 :CHIP
FL015
1000P :EMI
R023
220 :CHIP
FL016
1000P :EMI
R024
220 :CHIP
C061
0.01
B:CHIP
L003
1mH
C062
0.01
B:CHIP
STBY+12V
CN301
3P
WHT-L
:S-MICRO
TO M BOARD
CN254
C.SYNC
GND
V.SYNC
FL004
47P :EMI
C079
4.7
:HT
R016
100 :CHIP
R378
3.9k
:RN-CP
R379
3.9k
:RN-CP
FL005
47P :EMI
C080
10
16V
:BP
R381
3.9k :RN-CP
R380
3.9k
:RN-CP
R017
330
:CHIP
CN303
7P
YEL (-L)
:S-MICRO
R-CUTOFF
G-CUTOFF
B-CUTOFF
GND
G2
FB005
102 :CHIP
FB006
102 :CHIP
FB007
102 :CHIP
FB008
102 :CHIP
R063
220 :CHIP
R066
220 :CHIP
R065
220 :CHIP
R064
220 :CHIP
STB
+12
R382
2.2k

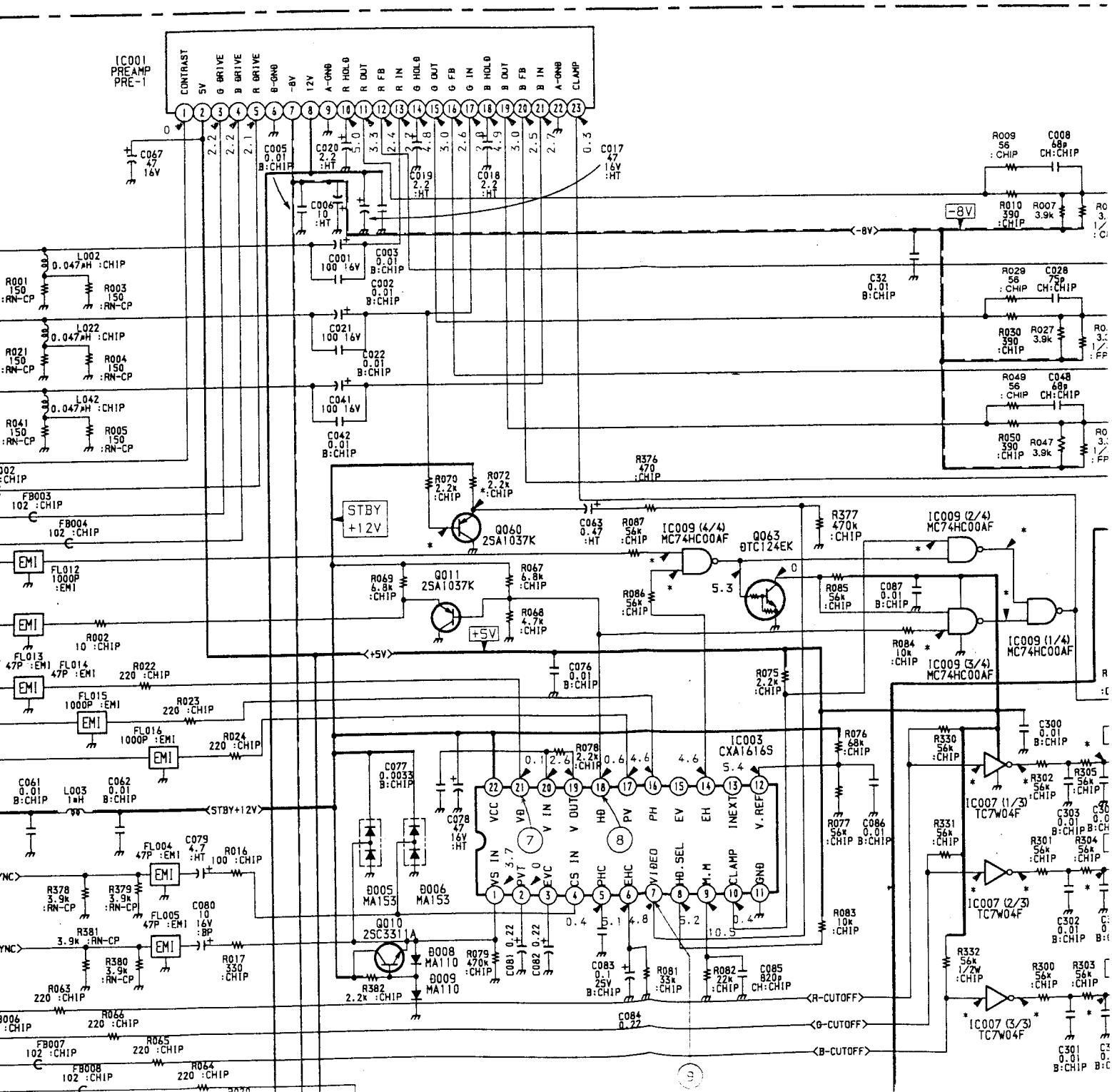
12
13
14
15
16
17
18
19
IC001
PREAMP
PRE-1
CONTRAST
5V
G DRIVE
B DRIVE
R DRIVE
B-GND
-8V
12V
A-GND
R HOLD
R OUT
R FB
R IN
G HOLD
G OUT
G FB
G IN
B HOLD
B OUT
B FB
B IN
A-GND
CLAMP
C067 47 16V
C005 0.01 B:CHIP
C020 2.2 :HT
C019 2.2 :HT
C018 2.2 :HT
C017 47 16V :HT
C006 10 :HT
C001 100 16V
C003 0.01 B:CHIP
C002 0.01 B:CHIP
C021 100 16V
C022 0.01 B:CHIP
C041 100 16V
C042 0.01 B:CHIP
L002 0.047μH :CHIP
L022 0.047μH :CHIP
L042 0.047μH :CHIP
R001 150 :RN-CP
R003 150 :RN-CP
R021 150 :RN-CP
R004 150 :RN-CP
R041 150 :RN-CP
R005 150 :RN-CP
FB003 102 :CHIP
FB004 102 :CHIP
FL012 1000P :EMI
FL013 47P :EMI
FL014 47P :EMI
FL015 1000P :EMI
FL014 1000P :EMI
R002 10 :CHIP
R022 220 :CHIP
R023 220 :CHIP
R024 220 :CHIP
C061 0.01 B:CHIP
L003 1mH
C062 0.01 B:CHIP
FL004 47P :EMI
C079 4.7 :HT
R016 100 :CHIP
R378 3.9k :RN-CP
R379 3.9k :RN-CP
FL005 47P :EMI
C080 10 16V :BP
R381 3.9k :RN-CP
R380 3.9k :RN-CP
R017 330 :CHIP
R063 220 :CHIP
R066 220 :CHIP
R065 220 :CHIP
R064 220 :CHIP
FB007 102 :CHIP
FB008 102 :CHIP
STBY +12V
R070 2.2k :CHIP
R072 2.2k :CHIP
Q060 2SA1037K
C063 0.47 :HT
R087 56k :CHIP
IC009 (4/4) MC74HC00AF
Q063 DTC124EK
R376 470 :CHIP
R377 470k :CHIP
IC009 (2/4) MC74HC00AF
R069 6.8k :CHIP
Q011 2SA1037K
R067 6.8k :CHIP
R068 4.7k :CHIP
+5V
R086 56k :CHIP
R085 56k :CHIP
C087 0.01 B:CHIP
R084 10k :CHIP
IC009 (3/4) MC74HC00AF
IC009 (1/4) MC74HC00AF
C076 0.01 B:CHIP
R075 2.2k :CHIP
C077 0.0033 B:CHIP
D005 MA153
D006 MA153
C078 47 16V :HT
R078 2.2k :CHIP
IC003 CXA1616S
VCC
VB
V IN
V OUT
HB
PV
PH
EV
EH
INEXT
V.REF
VS IN
PVT
EVC
CS IN
PHC
EHC
VIDEO
HB.SEL
M.M
CLAMP
GND
Q010 2SC3311A
D008 MA110
D009 MA110
R382 2.2k :CHIP
R079 470k :CHIP
C081 0.22
C082 0.22
C083 0.1 25V B:CHIP
R081 33k :CHIP
R082 22k :CHIP
C085 820p CH:CHIP
C084 0.22
R076 68k :CHIP
R077 56k :CHIP
C086 0.01 B:CHIP
R083 10k :CHIP
R330 56k :CHIP
R331 56k :CHIP
R332 56k 1/2W :CHIP
C300 0.01 B:CHIP
R302 56k :CHIP
R305 56k :CHIP
R301 56k :CHIP
R304 56k :CHIP
R300 56k :CHIP
R303 56k :CHIP
IC007 (1/3) TC7W04F
IC007 (2/3) TC7W04F
IC007 (3/3) TC7W04F
C303 0.01 B:CHIP
C302 0.01 B:CHIP
C301 0.01 B:CHIP
R009 56 :CHIP
C008 68p CH:CHIP
R010 390 :CHIP
R007 3.9k
C32 0.01 B:CHIP
R029 56 :CHIP
C028 75p CH:CHIP
R030 390 :CHIP
R027 3.9k
R049 56 :CHIP
C048 68p CH:CHIP
R050 390 :CHIP
R047 3.9k
R-CUTOFF
G-CUTOFF
B-CUTOFF
9

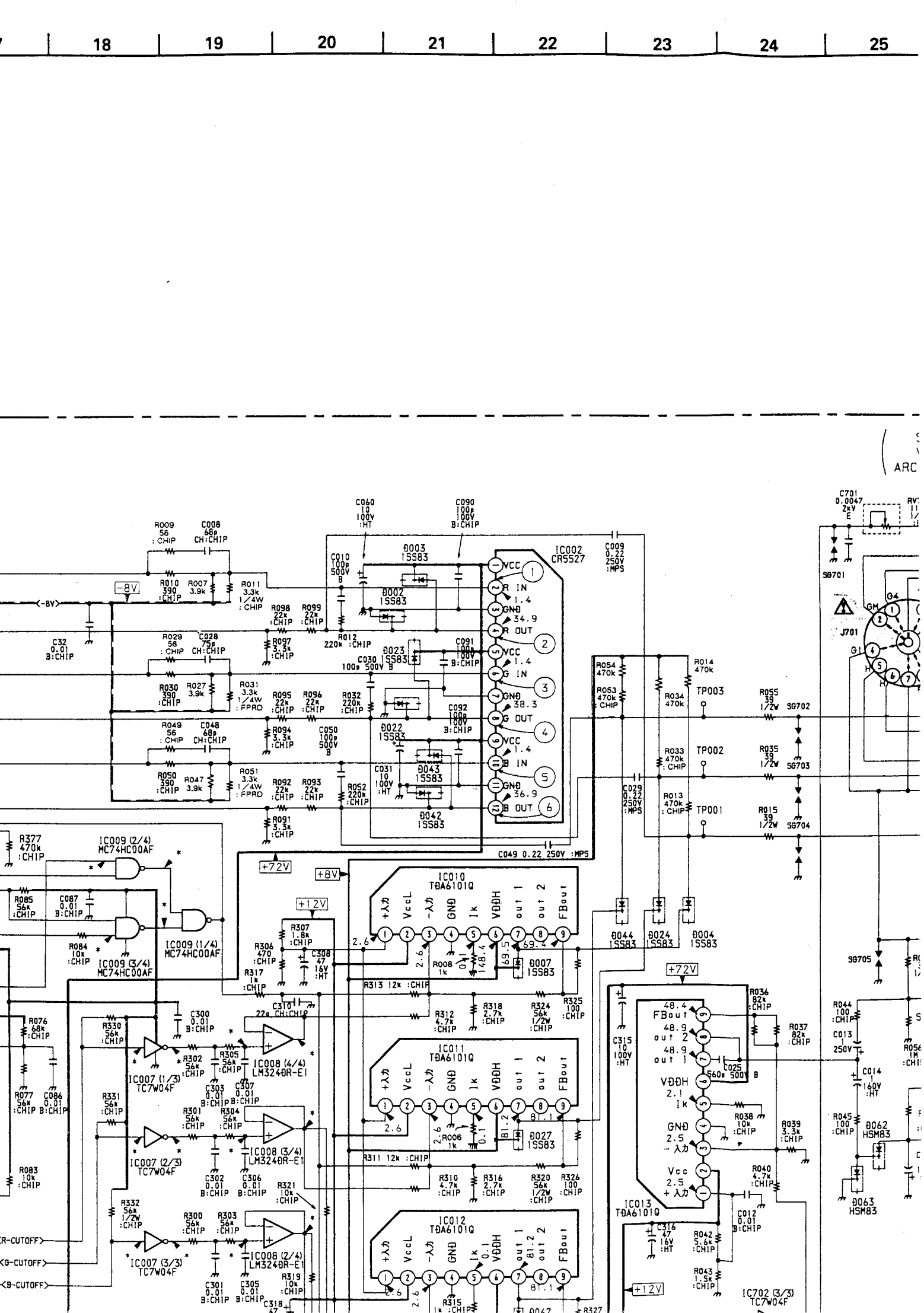
18
19
20
21
22
23
24
25
IC002 CR5527
IC009 (2/4) MC74HC00AF
IC009 (1/4) MC74HC00AF
IC009 (3/4) MC74HC00AF
IC007 (1/3) TC7W04F
IC007 (2/3) TC7W04F
IC007 (3/3) TC7W04F
IC008 (4/4) LM3240R-E1
IC008 (3/4) LM3240R-E1
IC008 (2/4) LM3240R-E1
IC010 TØA6101Q
IC011 TØA6101Q
IC012 TØA6101Q
IC013 TØA6101Q
IC702 (3/3) TC7W04F
-8V
+72V
+8V
+12V
TP003
TP002
TP001
SG702
SG703
SG704
SG705
SG701
J701
R-CUTOFF
G-CUTOFF
B-CUTOFF

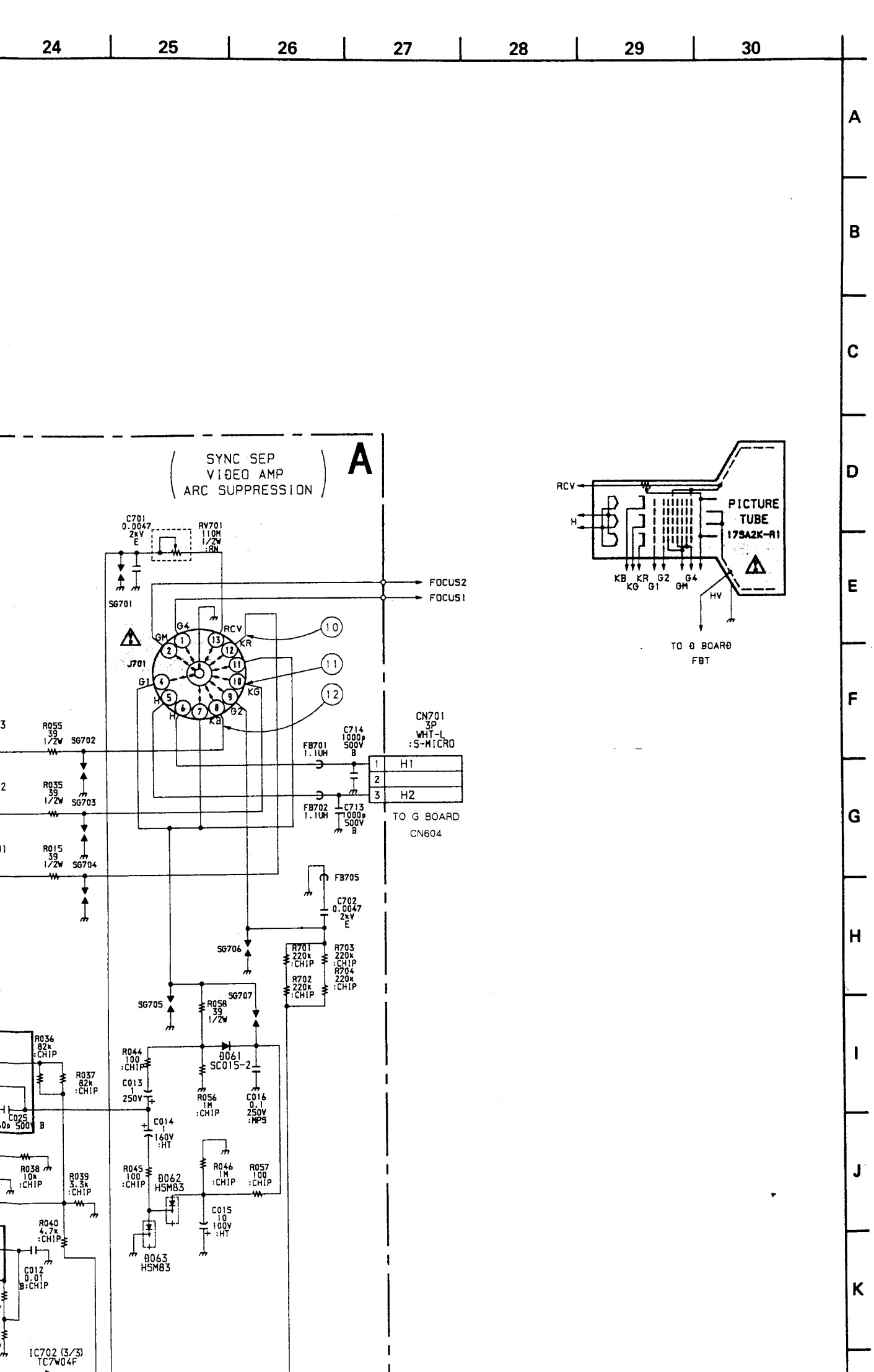
24
25
26
27
28
29
30
A
B
C
D
E
F
G
H
I
J
K
SYNC SEP
VIDEO AMP
ARC SUPPRESSION
A
C701
0.0047
2kV
E
RV701
110M
1/2W
:RN
SG701
FOCUS2
FOCUS1
J701
G4
GM
RCV
KR
G1
KG
H
KB
G2
10
11
12
R055
39
1/2W
SG702
R035
39
1/2W
SG703
R015
39
1/2W
SG704
FB701
1.1UH
C714
1000p
500V
B
FB702
1.1UH
C713
1000p
500V
B
CN701
3P
WHT-L
:S-MICRO
1 H1
2
3 H2
TO G BOARD
CN604
FB705
C702
0.0047
2kV
E
SG706
R701
220k
:CHIP
R702
220k
:CHIP
R703
220k
:CHIP
R704
220k
:CHIP
SG705
SG707
R058
39
1/2W
D061
SC015-2
R036
82k
:CHIP
R037
82k
:CHIP
R044
100
:CHIP
C013
1
250V
R056
1M
:CHIP
C016
0.1
250V
:MPS
C025
500V
B
C014
1
160V
:HT
R038
10k
:CHIP
R039
3.3k
:CHIP
R045
100
:CHIP
D062
HSM83
R046
1M
:CHIP
R057
100
:CHIP
C015
10
100V
:HT
R040
4.7k
:CHIP
C012
0.01
B:CHIP
D063
HSM83
IC702 (3/3)
TC7W04F
RCV
H
PICTURE
TUBE
17SA2K-R1
KB KR G2 G4
KG G1 GM
HV
TO D BOARD
FBT

F G H I J K L M N O

R IN
G IN
B IN

A Board IC005 NJM78L05A

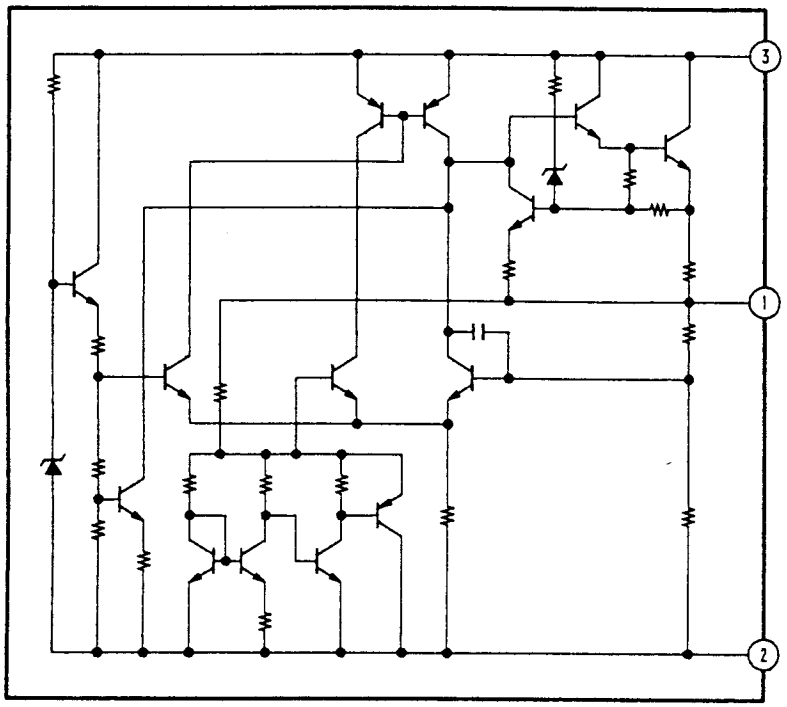

A BOARD WAVEFORMS

1 1.0 Vp-p (H)	2 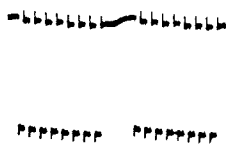 45.0 Vp-p (H)	3 1.0 Vp-p (H)
4 41.0 Vp-p (H)	5 1.1 Vp-p (H)	6 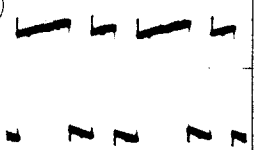 33.0 Vp-p (H)
7 0.6 Vp-p (H)	8 4.7 Vp-p (H)	9 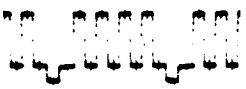 1.0 Vp-p (H)
10 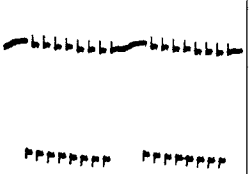 45.0 Vp-p (H)	11 41.0 Vp-p (H)	12 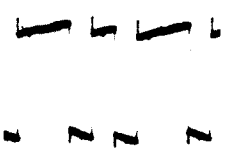 33.0 Vp-p (H)

Schematic diagrams
← D F boards

Schematic diagram
A board →

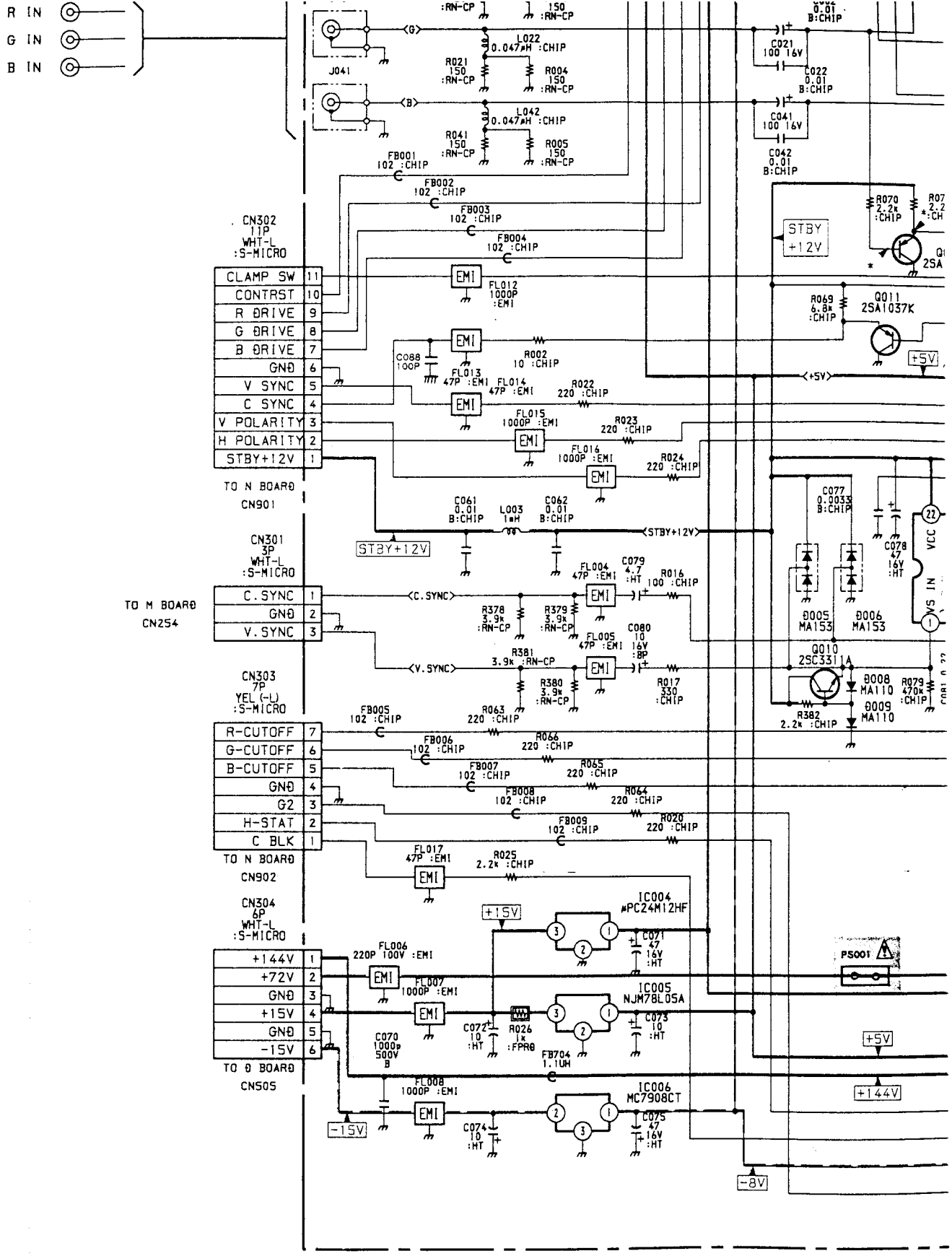

Schematic diagram

A board ➡

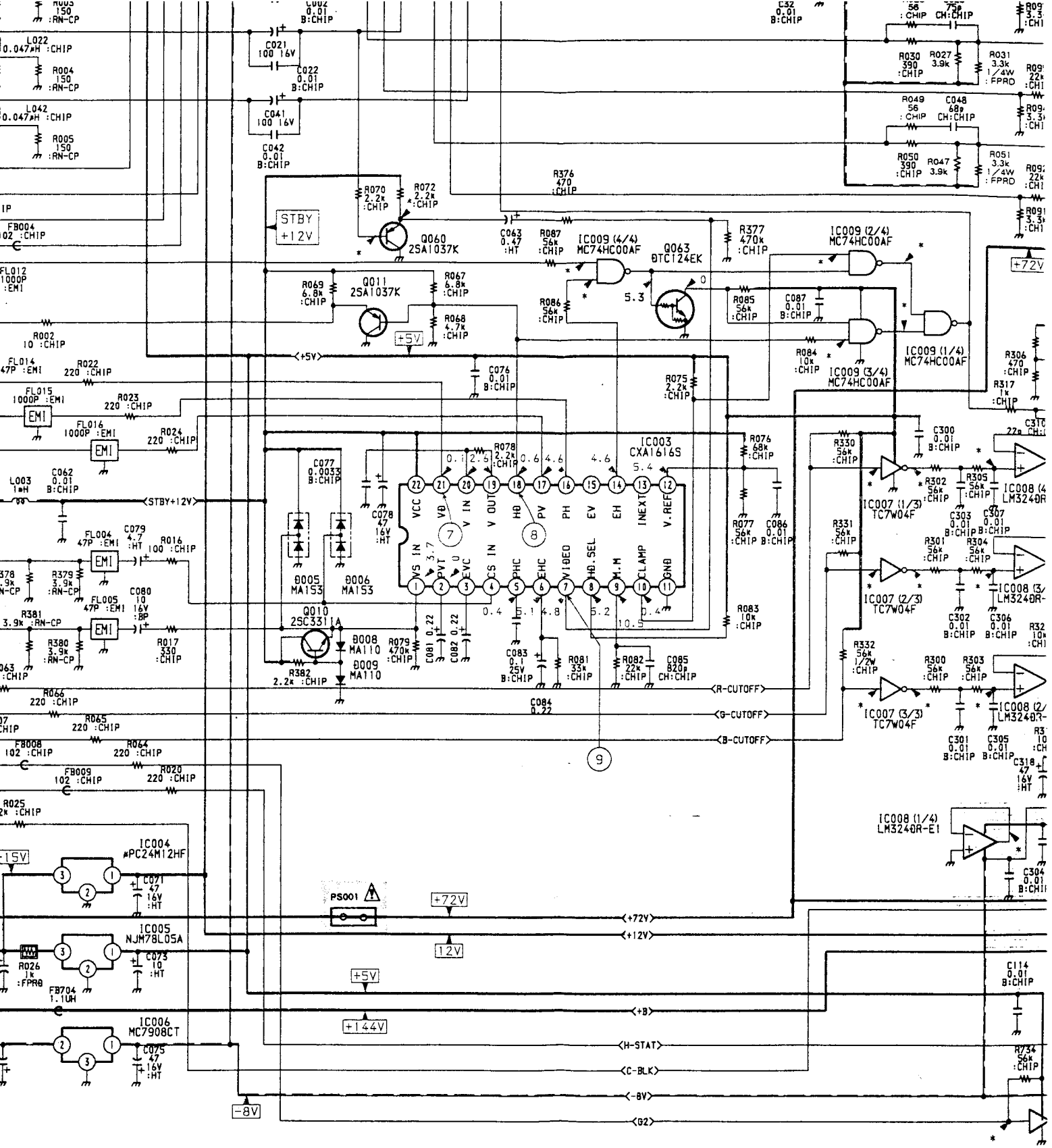
STBY +12V
Q060 2SA1037K
Q011 2SA1037K
Q063 DTC124EK
IC009 (4/4) MC74HC00AF
IC009 (2/4) MC74HC00AF
IC009 (1/4) MC74HC00AF
IC009 (3/4) MC74HC00AF
IC003 CXA1616S
IC007 (1/3) TC7W04F
IC007 (2/3) TC7W04F
IC007 (3/3) TC7W04F
IC008 (1/4) LM3240R-E1
Q010 2SC3311A
D005 MA153
D006 MA153
D008 MA110
D009 MA110
IC004 μPC24M12HF
IC005 NJM78L05A
IC006 MC7908CT
PS001
+72V
+12V
+5V
+144V
-8V
-15V
STBY+12V
R-CUTOFF
G-CUTOFF
B-CUTOFF
+B
H-STAT
C-BLK
G2

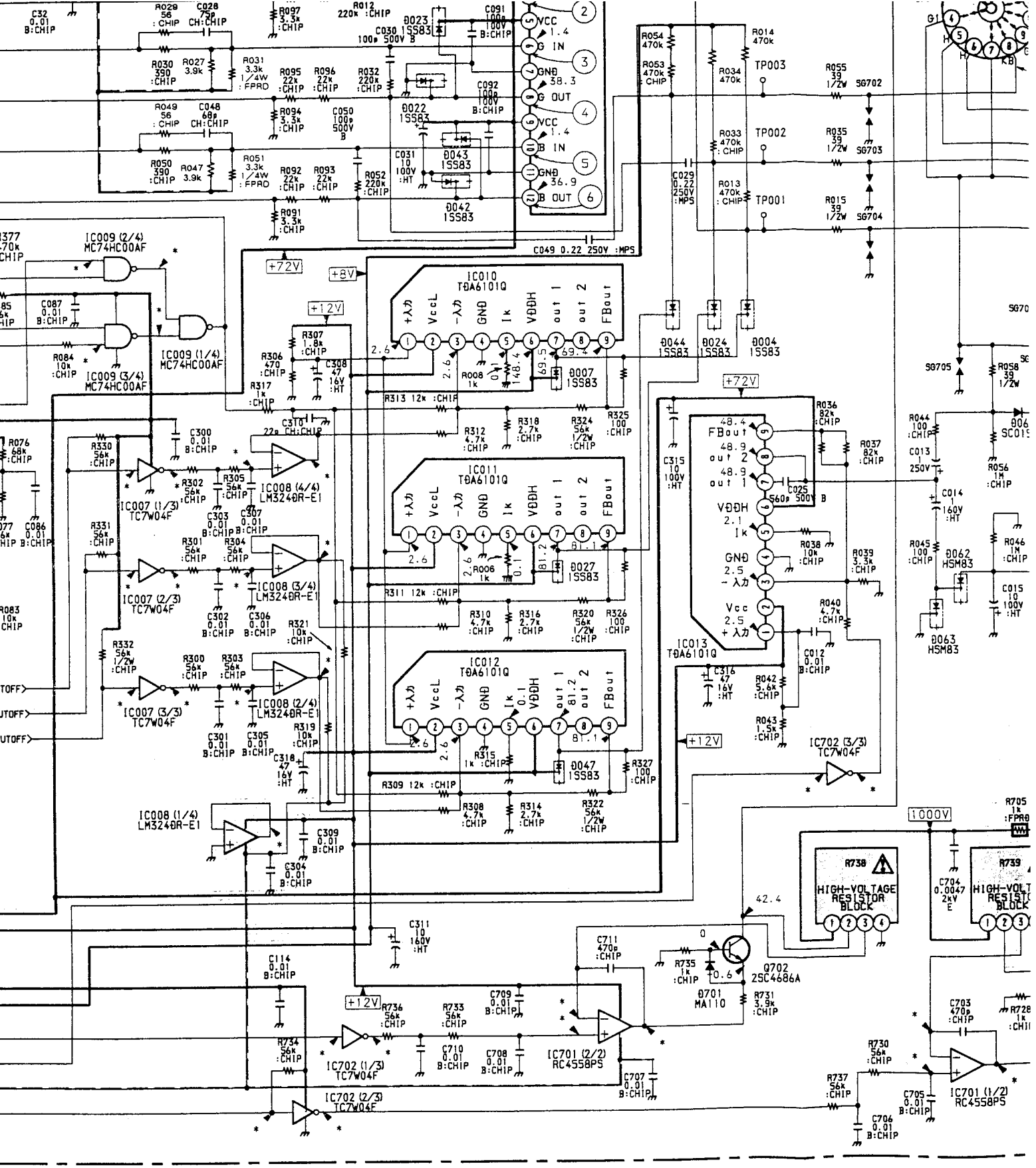
IC009 (2/4) MC74HC00AF
IC009 (1/4) MC74HC00AF
IC009 (3/4) MC74HC00AF
IC007 (1/3) TC7W04F
IC007 (2/3) TC7W04F
IC007 (3/3) TC7W04F
IC008 (4/4) LM3240R-E1
IC008 (3/4) LM3240R-E1
IC008 (2/4) LM3240R-E1
IC008 (1/4) LM3240R-E1
IC010 TOA6101Q
IC011 TOA6101Q
IC012 TOA6101Q
IC013 TOA6101Q
IC702 (3/3) TC7W04F
IC702 (1/3) TC7W04F
IC702 (2/3) TC7W04F
IC701 (2/2) RC4558PS
IC701 (1/2) RC4558PS
Q702 2SC4686A
Q701 MA110
HIGH-VOLTAGE RESISTOR BLOCK
+72V
+8V
+12V
1000V
TP003
TP002
TP001

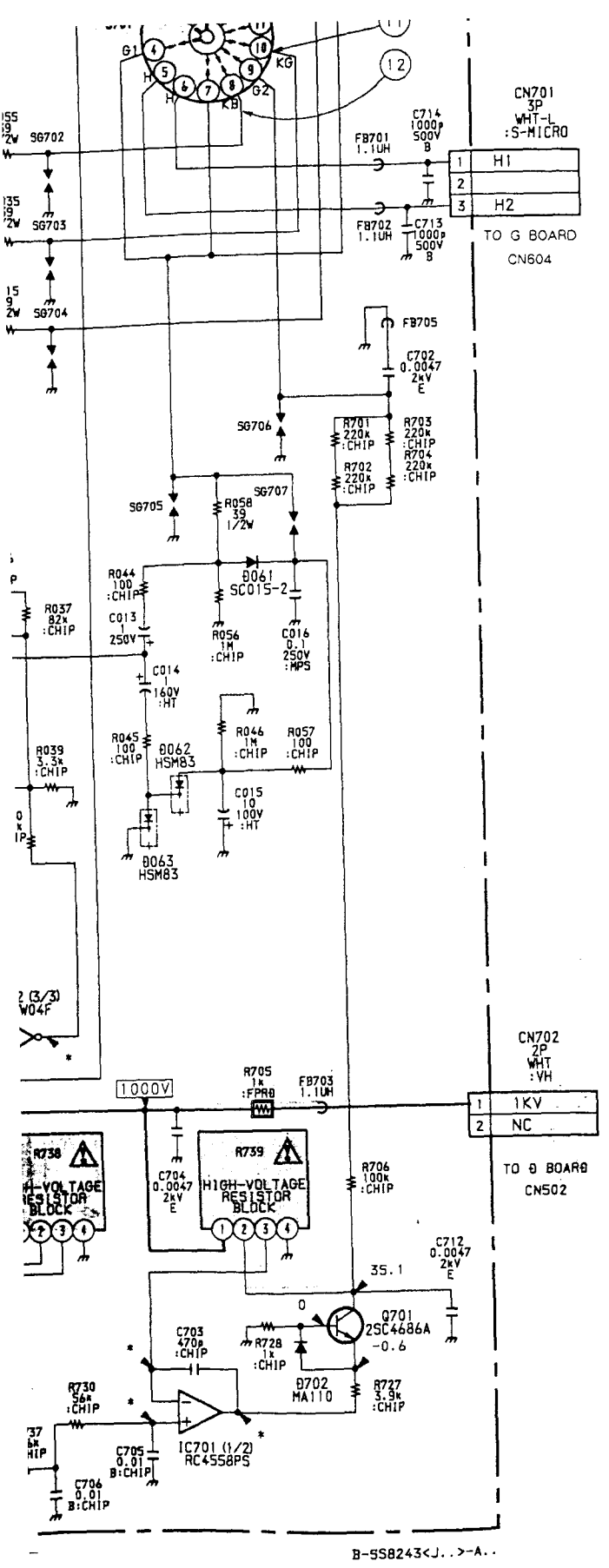
CN701
3P
WHT-L
:S-MICRO
1 H1
2
3 H2
TO G BOARD
CN604
FB701
1.1UH
C714
1000p
500V
B
FB702
1.1UH
C713
1000p
500V
B
SG702
SG703
SG704
FB705
C702
0.0047
2kV
E
SG706
SG707
SG705
R701
220k
:CHIP
R702
220k
:CHIP
R703
220k
:CHIP
R704
220k
:CHIP
R058
39
1/2W
D061
SC015-2
R044
100
:CHIP
C013
1
250V
R056
1M
:CHIP
C016
0.1
250V
:MPS
C014
1
160V
:HT
R037
82k
:CHIP
R045
100
:CHIP
D062
HSM83
R046
1M
:CHIP
R057
100
:CHIP
C015
10
100V
:HT
D063
HSM83
R039
3.3k
:CHIP
CN702
2P
WHT
:VH
1 1KV
2 NC
TO θ BOARD
CN502
1000V
R705
1k
:FPRB
FB703
1.1UH
R738
HIGH-VOLTAGE
RESISTOR
BLOCK
R739
HIGH-VOLTAGE
RESISTOR
BLOCK
C704
0.0047
2kV
E
R706
100k
:CHIP
C712
0.0047
2kV
E
35.1
0
Q701
2SC4686A
-0.6
C703
470p
:CHIP
R728
1k
:CHIP
D702
MA110
R727
3.9k
:CHIP
R730
56k
:CHIP
IC701 (1/2)
RC4558PS
C705
0.01
B:CHIP
C706
0.01
B:CHIP
B-SS8243<J..>-A..

A [SYNC SEP / VIDEO AMP / ARC SUPPRESSION]

– A Board (Conductor Side) –

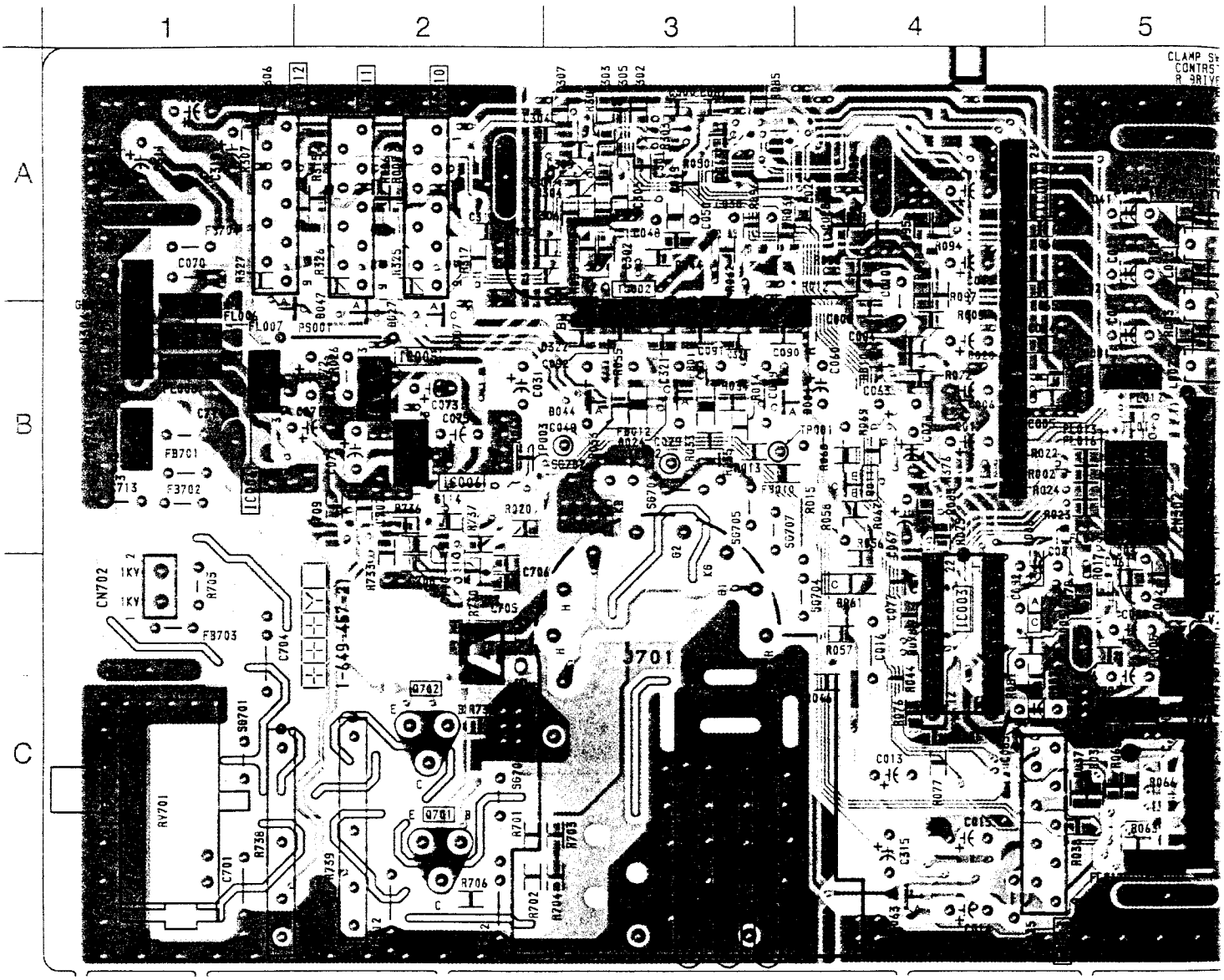

- : Pattern from the side which enables seeing.
- : Pattern of the rear side.

A [SYNC SEP / VIDEO AMP / ARC SUPPRESSION]

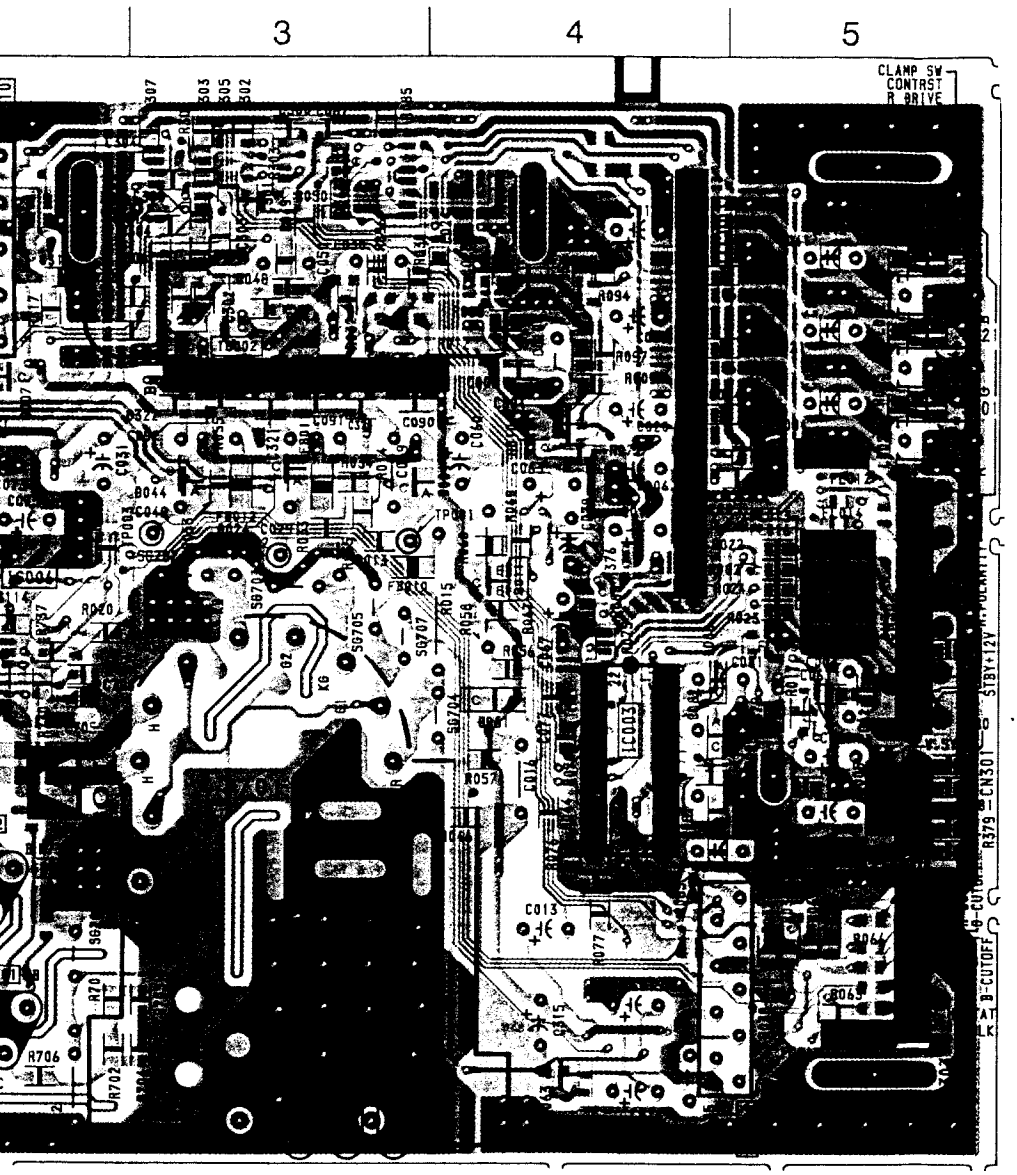

• **A BOARD**

IC	(Conductor Side)	(Component Side)
IC001	B – 4	B – 1
IC002	B – 3	B – 3
IC003	C – 4	
IC004	B – 1	B – 4
IC005	B – 2	B – 4
IC006	B – 2	B – 4
IC007		A – 3
IC008		A – 3
IC009		A – 3
IC010	A – 2	A – 4
IC011	A – 2	A – 4
IC012	A – 1	A – 4
IC013	C – 4	C – 1
IC701		B – 4
IC702		B – 4

TRANSISTOR	(Conductor Side)	(Component Side)
Q010		B – 1
Q011	B – 4	
Q060		B – 2
Q063	A – 3	
Q701	C – 2	C – 4
Q702	C – 2	C – 4

DIODE	(Conductor Side)	(Component Side)
D002		A – 3
D003		A – 2
D004	B – 3	
D005		C – 1
D006		C – 1
D007	B – 2	
D008	C – 4	
D009	C – 4	
D022		A – 3
D023		A – 3
D024	B – 3	
D027	B – 2	
D042		A – 3
D043		A – 3
D044	B – 3	
D047	B – 1	
D061	C – 4	
D062		C – 2
D063	C – 4	
D701		C – 4
D702		C – 4

VARIABLE RESISTOR	(Conductor Side)	(Component Side)
RV701	C – 1	C – 5

– A Board (Component Side) –

• A BOARD

IC	(Conductor Side)	(Component Side)
IC001	B – 4	B – 1
IC002	B – 3	B – 3
IC003	C – 4	
IC004	B – 1	B – 4
IC005	B – 2	B – 4
IC006	B – 2	B – 4
IC007		A – 3
IC008		A – 3
IC009		A – 3
IC010	A – 2	A – 4
IC011	A – 2	A – 4
IC012	A – 1	A – 4
IC013	C – 4	C – 1
IC701		B – 4
IC702		B – 4

TRANSISTOR	(Conductor Side)	(Component Side)
Q010		B – 1
Q011	B – 4	
Q060		B – 2
Q063	A – 3	
Q701	C – 2	C – 4
Q702	C – 2	C – 4

DIODE	(Conductor Side)	(Component Side)
D002		A – 3
D003		A – 2
D004	B – 3	
D005		C – 1
D006		C – 1
D007	B – 2	
D008	C – 4	
D009	C – 4	
D022		A – 3
D023		A – 3
D024	B – 3	
D027	B – 2	
D042		A – 3
D043		A – 3
D044	B – 3	
D047	B – 1	
D061	C – 4	
D062		C – 2
D063	C – 4	
D701		C – 4
D702		C – 4

VARIABLE RESISTOR	(Conductor Side)	(Component Side)
RV701	C – 1	C – 5

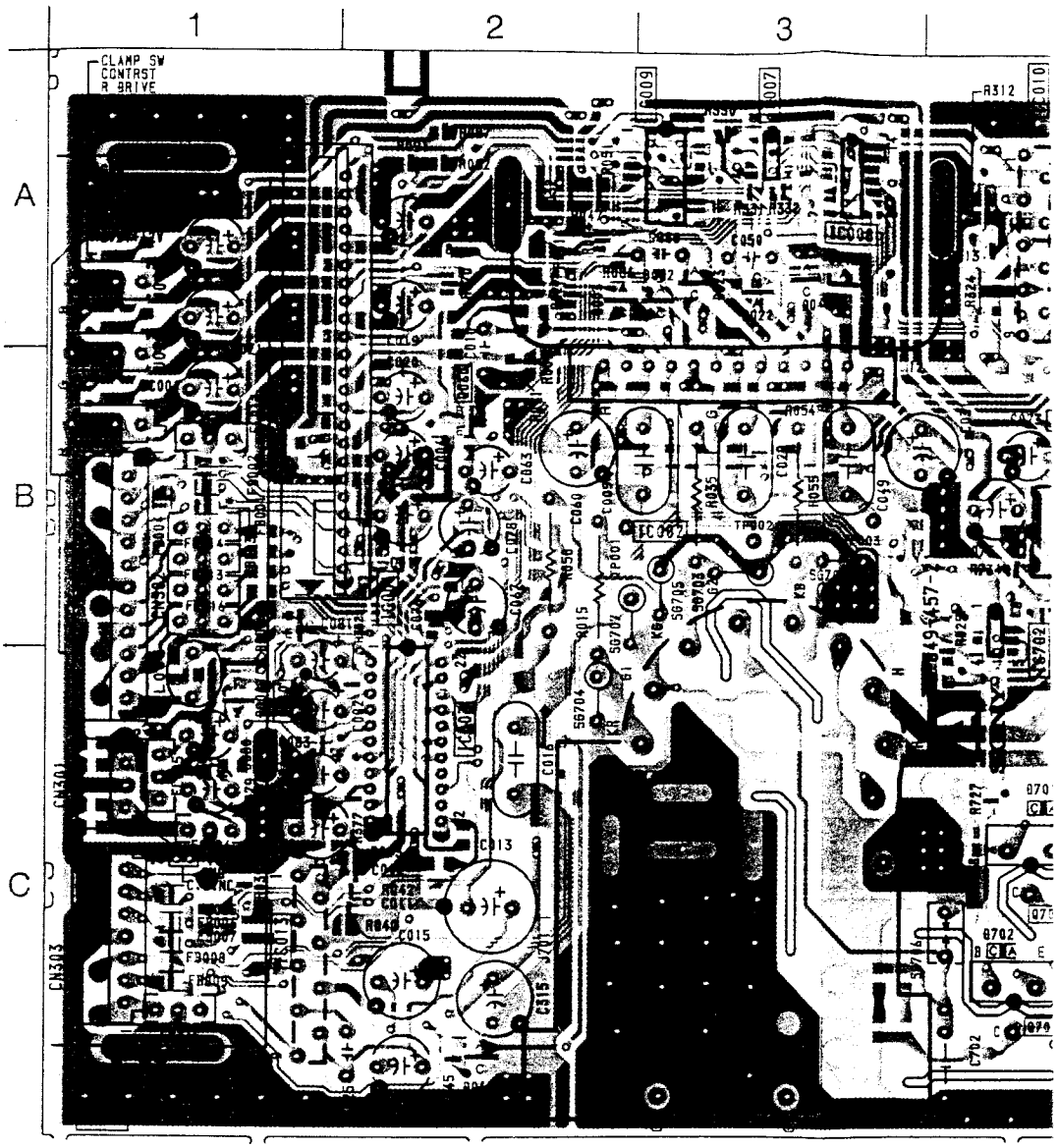

• : Pattern from the side which enables seeing.
• : Pattern of the rear side.

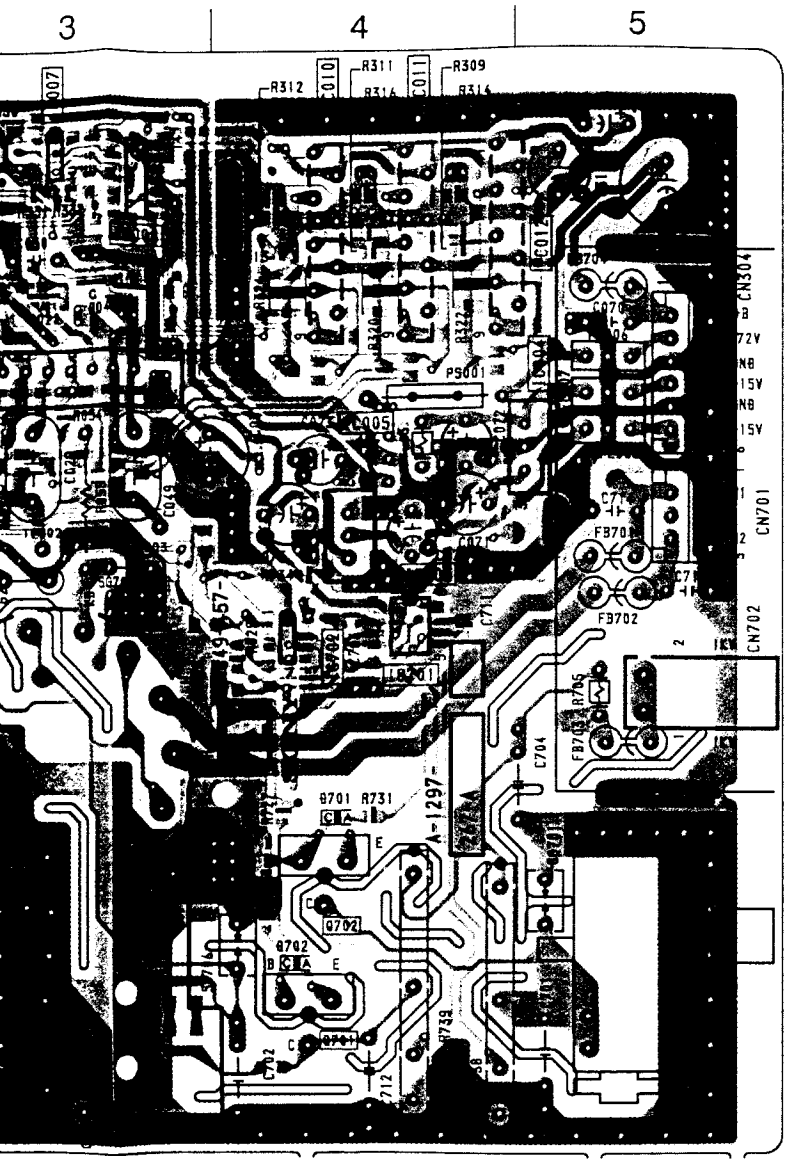
3
4
5
R312
R311
R309
C010
C011
R316
R320
R322
PS001
C005
C007
C009
C049
C701
C702
C704
C711
C712
C739
FB701
FB702
CN304
CN701
CN702
Q701
Q702
R731
R705
A-1297-
72V
15V
15V

– N Board (Conductor Side) –

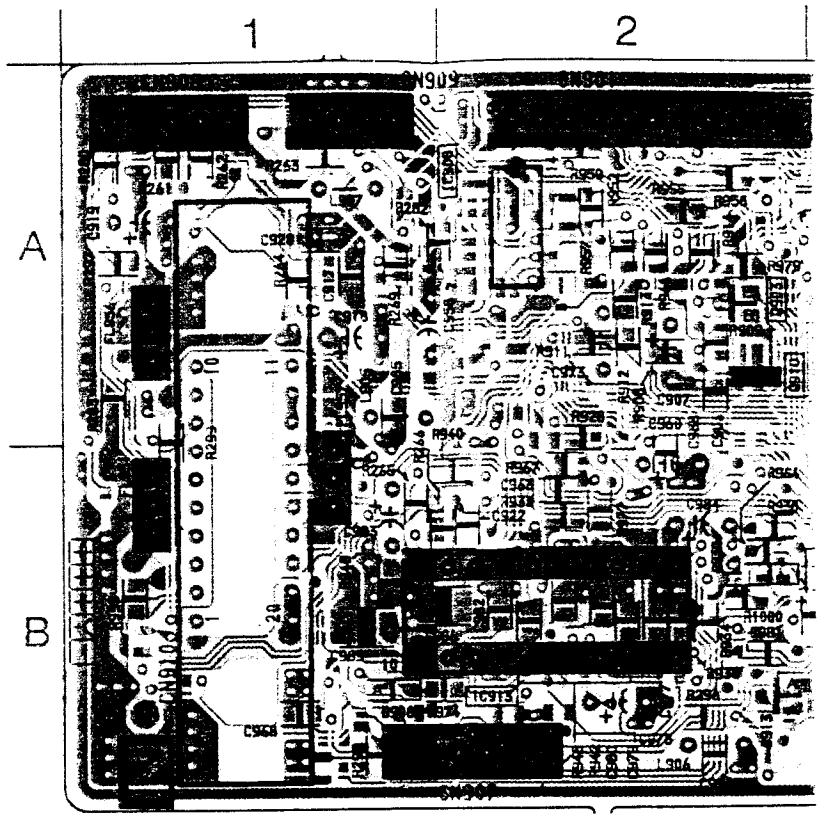

- : Pattern from the side which enables seeing.
- : Pattern of the rear side.

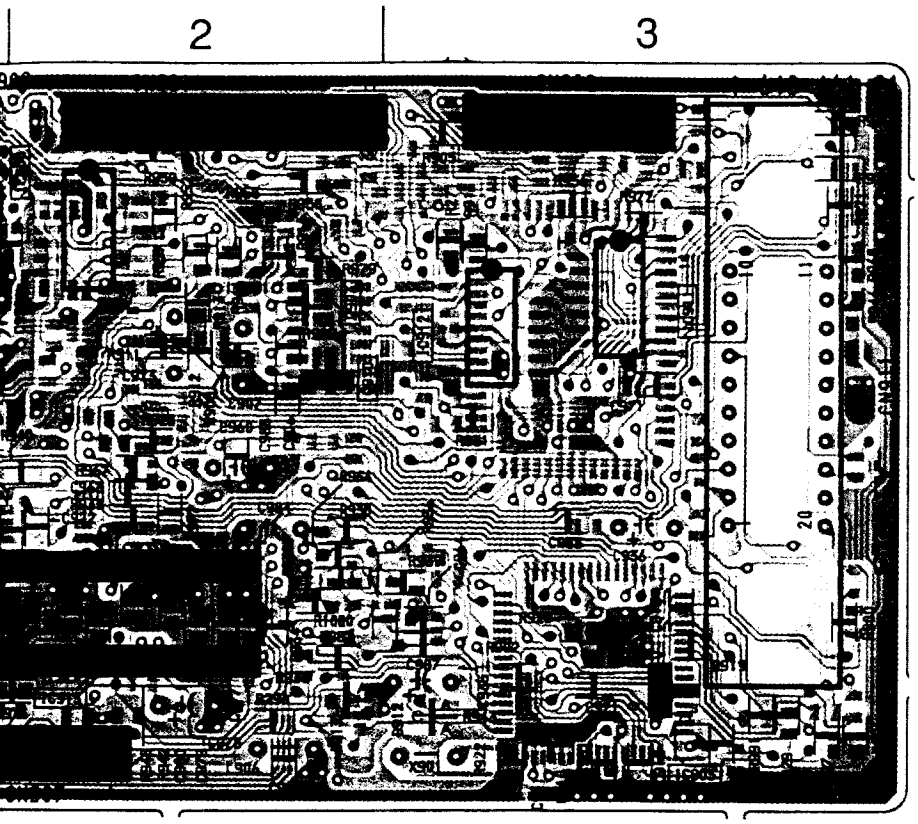

s seeing.

• N BOARD

IC	(Conductor Side)	(Component Side)
IC901		A – 1
IC902		A – 2
IC903	B – 3	
IC904		B – 1
IC905		A – 3
IC908	A – 2	
IC909		A – 3
IC911	A – 3	
IC912	A – 3	
IC913	B – 2	B – 2
IC914		B – 3

TRANSISTOR	(Conductor Side)	(Component Side)
Q903	A – 2	
Q905		B – 2
Q906	B – 2	
Q907		B – 3
Q909		B – 2
Q910	A – 2	
Q912		B – 2

DIODE	(Conductor Side)	(Component Side)
D901		A – 2
D902		B – 3
D903		A – 3
D904		A – 3
D905		B – 1
D906		B – 3
D907		B – 2
D908	B – 1	
D909		B – 2
D910		B – 2
D911		B – 2
D912	B – 3	
D913	B – 2	
D914		B – 2
D915		B – 3
D917		B – 3
D920		A – 2

CRYSTAL	(Conductor Side)	(Component Side)
X901	B – 3	B – 2

– N Board (Component Side) –

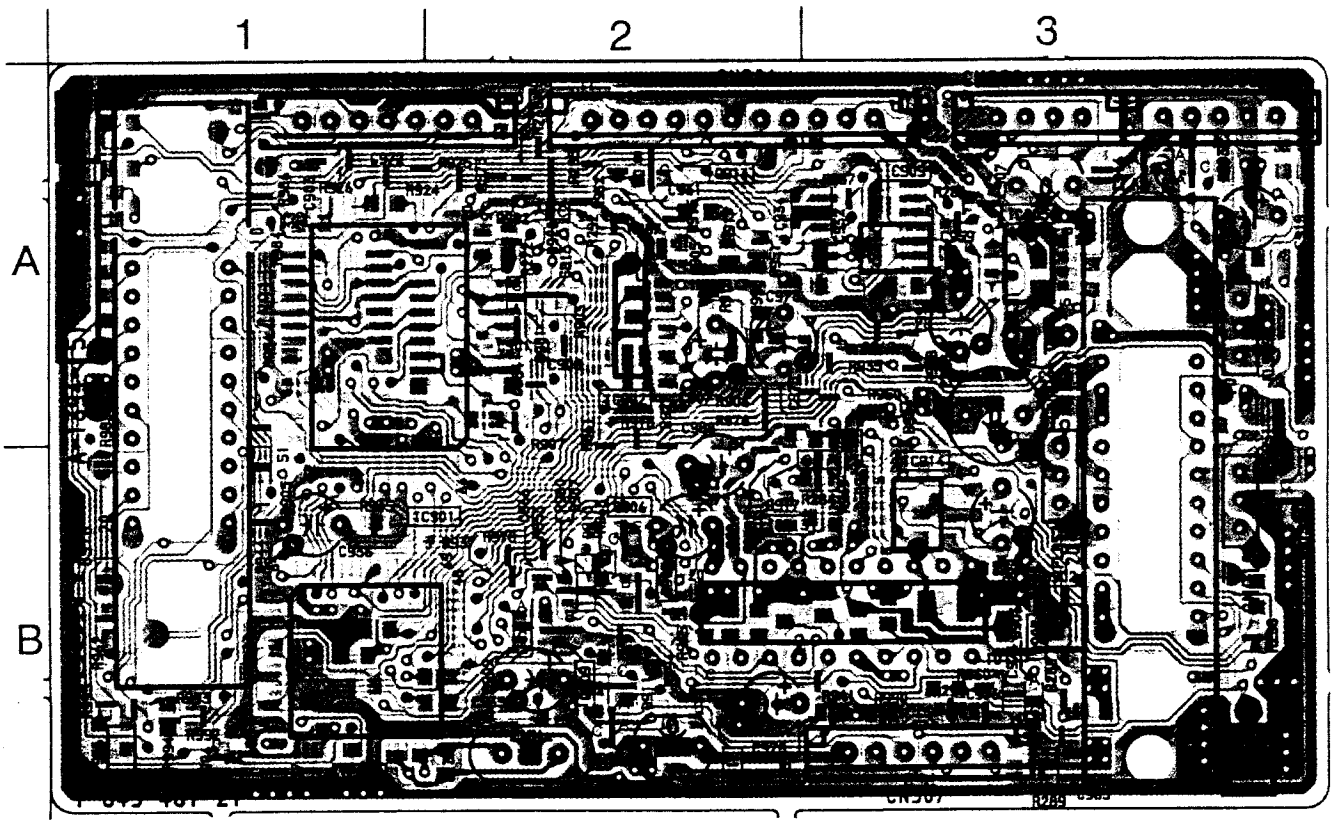

- : Pattern from the side which enables seeing.
- : Pattern of the rear side.

(3) Schematic Diagram of N Board

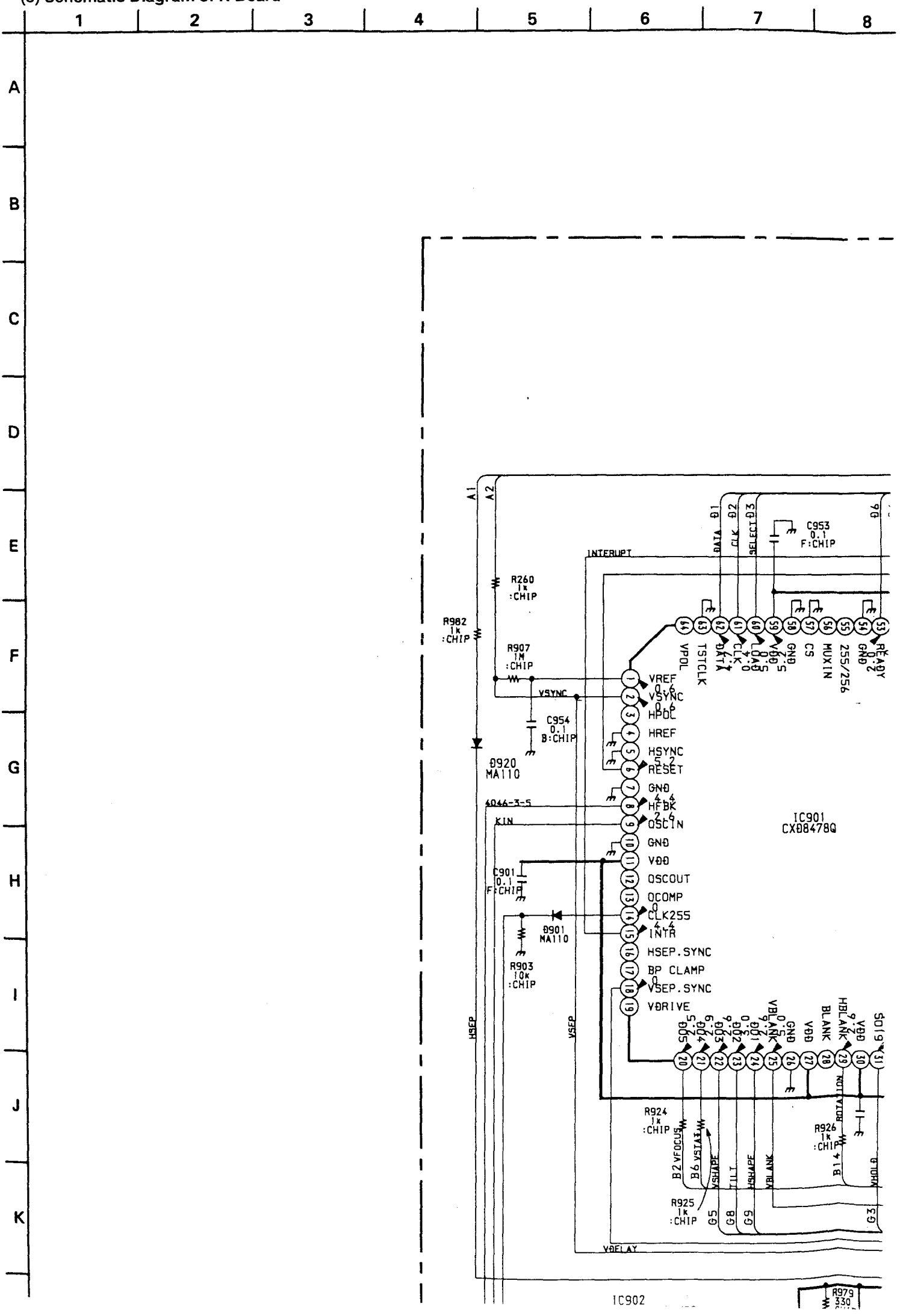

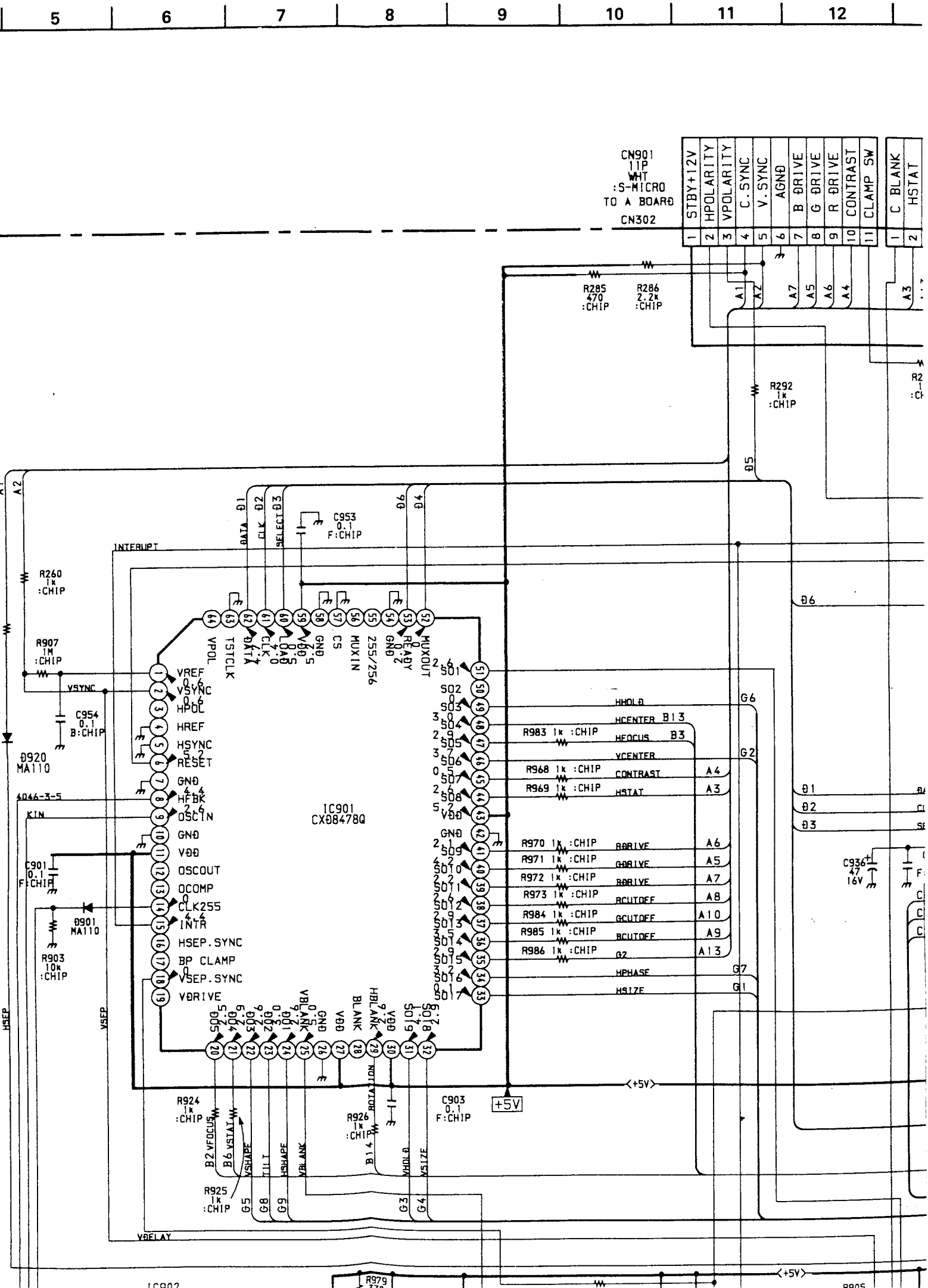
5
6
7
8
9
10
11
12
CN901
11P
WHT
:S-MICRO
TO A BOARD
CN302
STBY+12V
HPOLARITY
VPOLARITY
C.SYNC
V.SYNC
AGND
B DRIVE
G DRIVE
R DRIVE
CONTRAST
CLAMP SW
C BLANK
HSTAT
R285
470
:CHIP
R286
2.2k
:CHIP
R292
1k
:CHIP
C953
0.1
F:CHIP
INTERUPT
R260
1k
:CHIP
R907
1M
:CHIP
C954
0.1
B:CHIP
D920
MA110
4046-3-5
KIN
C901
0.1
F:CHIP
D901
MA110
R903
10k
:CHIP
IC901
CX08478Q
R983 1k :CHIP
R968 1k :CHIP
R969 1k :CHIP
R970 1k :CHIP
R971 1k :CHIP
R972 1k :CHIP
R973 1k :CHIP
R984 1k :CHIP
R985 1k :CHIP
R986 1k :CHIP
C936
47
16V
R924
1k
:CHIP
R925
1k
:CHIP
R926
1k
:CHIP
C903
0.1
F:CHIP
+5V
VDELAY
HSEP
VSEP

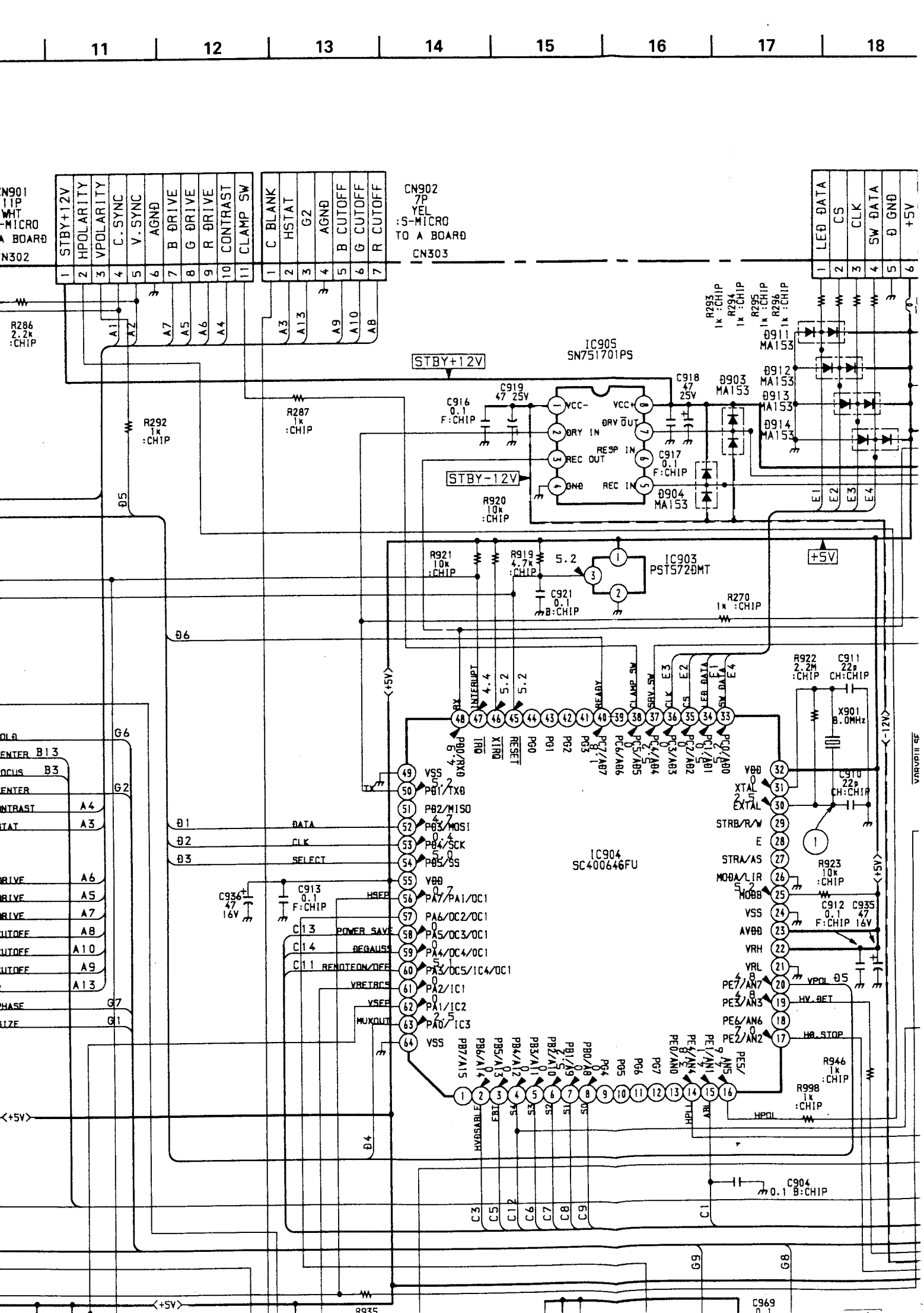
11
12
13
14
15
16
17
18
CN901
11P
WHT
-MICRO
A BOARD
CN302
STBY+12V
HPOLARITY
VPOLARITY
C.SYNC
V.SYNC
AGND
B DRIVE
G DRIVE
R DRIVE
CONTRAST
CLAMP SW
C BLANK
HSTAT
G2
AGND
B CUTOFF
G CUTOFF
R CUTOFF
CN902
7P
YEL
:S-MICRO
TO A BOARD
CN303
LED DATA
CS
CLK
SW DATA
D GND
+5V
R286
2.2k
:CHIP
R287
1k
:CHIP
R292
1k
:CHIP
IC905
SN751701PS
STBY+12V
STBY-12V
C916
0.1
F:CHIP
C919
47 25V
C918
47
25V
C917
0.1
F:CHIP
D903
MA153
D904
MA153
D911
MA153
D912
MA153
D913
MA153
D914
MA153
R920
10k
:CHIP
R921
10k
:CHIP
R919
4.7k
:CHIP
IC903
PST572DMT
C921
0.1
B:CHIP
R270
1k :CHIP
+5V
R922
2.2M
:CHIP
C911
22p
CH:CHIP
X901
8.0MHz
C910
22p
CH:CHIP
R923
10k
:CHIP
C912
0.1
F:CHIP
C935
47
16V
IC904
SC400646FU
DATA
CLK
SELECT
HSEP
POWER SAVE
DEGAUSS
REMOTEON/OFF
VRETRCS
VSEP
MUXOUT
C936
47
16V
C913
0.1
F:CHIP
VPOL
HV.BET
HD.STOP
HPOL
R946
1k
:CHIP
R998
1k
:CHIP
C904
0.1 B:CHIP
R935
C969

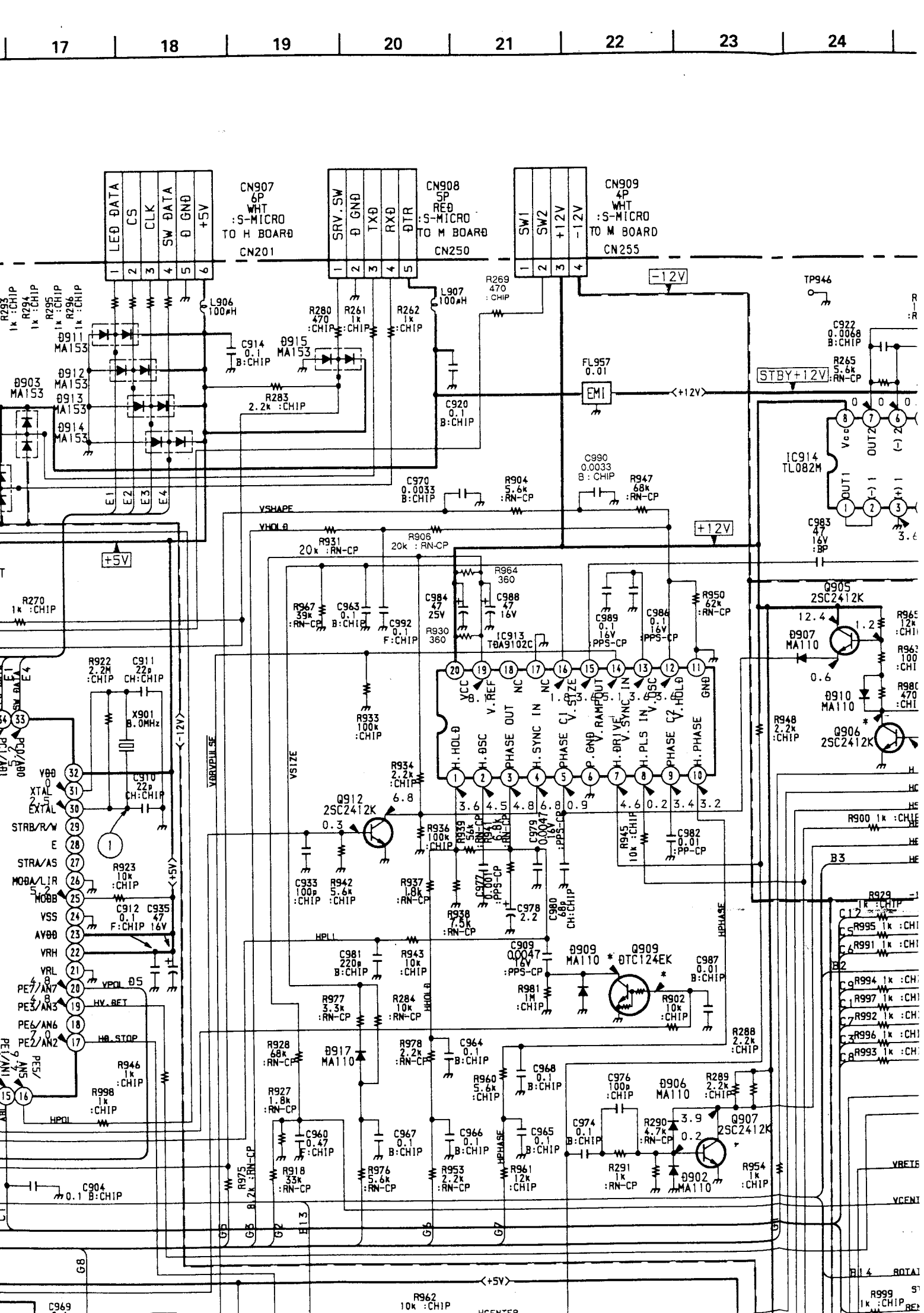
17
18
19
20
21
22
23
24
CN907
6P
WHT
:S-MICRO
TO H BOARD
CN201
LED DATA
CS
CLK
SW DATA
D GND
+5V
CN908
5P
RED
:S-MICRO
TO M BOARD
CN250
SRV.SW
D GND
TXD
RXD
DTR
CN909
4P
WHT
:S-MICRO
TO M BOARD
CN255
SW1
SW2
+12V
-12V
L906
100μH
L907
100μH
R269
470
:CHIP
TP946
C922
0.0068
B:CHIP
R265
5.6k
:RN-CP
STBY+12V
FL957
0.01
EMI
C920
0.1
B:CHIP
C914
0.1
B:CHIP
D911
MA153
D912
MA153
D913
MA153
D914
MA153
D915
MA153
D903
MA153
R283
2.2k :CHIP
R280
470
:CHIP
R261
1k
:CHIP
R262
1k
:CHIP
IC914
TL082M
C983
47
16V
:BP
C990
0.0033
B:CHIP
R947
68k
:RN-CP
C970
0.0033
B:CHIP
R904
5.6k
:RN-CP
VSHAPE
VHOLD
R931
20k :RN-CP
R906
20k :RN-CP
+12V
+5V
R270
1k :CHIP
R964
360
R930
360
C984
47
25V
C988
47
16V
IC913
TDA9102C
R967
39k
:RN-CP
C963
0.1
B:CHIP
C992
0.1
F:CHIP
C989
0.1
16V
:PPS-CP
C986
0.1
16V
:PPS-CP
R950
62k
:RN-CP
Q905
2SC2412K
D907
MA110
D910
MA110
Q906
2SC2412K
R948
2.2k
:CHIP
R922
2.2M
:CHIP
C911
22p
CH:CHIP
X901
8.0MHz
C910
22p
CH:CHIP
R933
100k
:CHIP
R934
2.2k
:CHIP
Q912
2SC2412K
R936
100k
:CHIP
R939
56k
:RN-CP
R941
6.8k
:RN-CP
C979
0.0047
16V
:PPS-CP
R945
10k :CHIP
C982
0.01
:PP-CP
C933
100p
:CHIP
R942
5.6k
:CHIP
R937
1.8k
:RN-CP
R938
7.5k
:RN-CP
C977
0.0011
:PPS-CP
C978
2.2
C980
68p
CH:CHIP
R923
10k
:CHIP
C912
0.1
F:CHIP
C935
47
16V
HPLL
C981
220p
B:CHIP
R943
10k
:CHIP
C909
0.0047
16V
:PPS-CP
D909
MA110
Q909
DTC124EK
C987
0.01
B:CHIP
R981
1M
:CHIP
R902
10k
:CHIP
R977
3.3k
:RN-CP
R284
10k
:RN-CP
R288
2.2k
:CHIP
R928
68k
:RN-CP
D917
MA110
R978
2.2k
:RN-CP
C964
0.1
B:CHIP
R960
5.6k
:CHIP
C968
0.1
B:CHIP
C976
100p
:CHIP
D906
MA110
R289
2.2k
:CHIP
R927
1.8k
:RN-CP
C960
0.47
F:CHIP
C967
0.1
B:CHIP
C966
0.1
B:CHIP
C965
0.1
B:CHIP
C974
0.1
B:CHIP
R290
4.7k
:RN-CP
Q907
2SC2412K
R291
1k
:RN-CP
D902
MA110
R954
1k
:CHIP
R918
33k
:RN-CP
R976
5.6k
:RN-CP
R953
2.2k
:RN-CP
R961
12k
:CHIP
R975
8.2k :RN-CP
R946
1k
:CHIP
R998
1k
:CHIP
HPOL
C904
0.1 B:CHIP
VCC
V.REF
NC
NC
V.SIZE
V.RAMP OUT
V.SYNC IN
V.OSC
V.HOLD
GND
H.HOLD
H.OSC
PHASE OUT
H.SYNC IN
PHASE
P.GND
H.DRIVE
H.PLS IN
PHASE
H.PHASE
VSIZE
VDRVPULSE
HPHASE
VDD
XTAL
EXTAL
STRB/R/W
E
STRA/AS
MODA/LIR
MODB
VSS
AVDD
VRH
VRL
PE7/AN7
PE3/AN3
PE6/AN6
PE2/AN2
PE5/AN5
VPOL
HV.BET
HB.STOP
PD0/AN0
PD1/AN1
PD2
PD3
PD4
PD5
PD6
PD7
VRETR
VCENT
ROTAT
R962
10k :CHIP
R999
1k :CHIP
C969

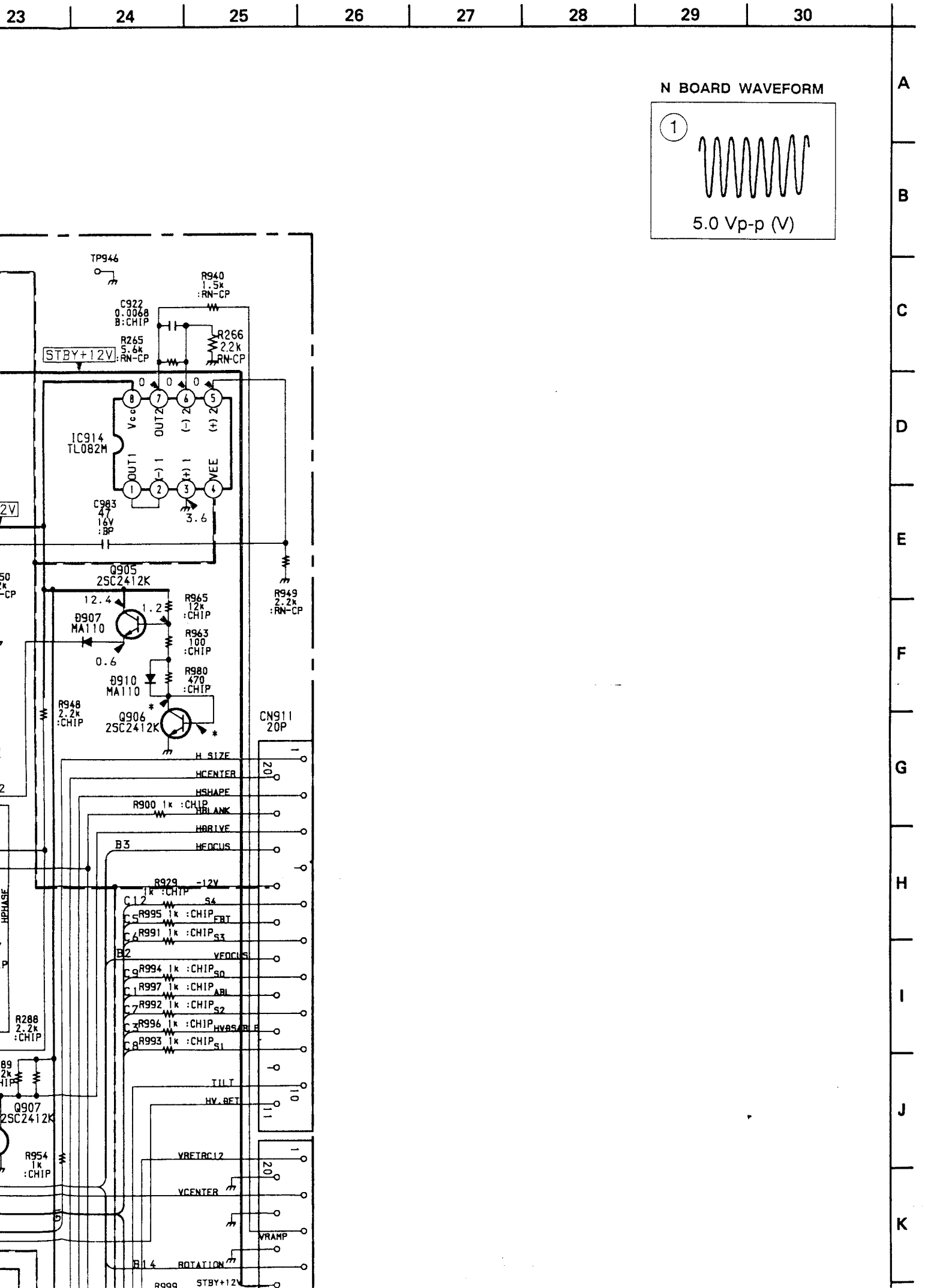
23
24
25
26
27
28
29
30
A
B
C
D
E
F
G
H
I
J
K
N BOARD WAVEFORM
1
5.0 Vp-p (V)
TP946
R940
1.5k
:RN-CP
C922
0.0068
B:CHIP
R265
5.6k
:RN-CP
R266
2.2k
:RN-CP
STBY+12V
IC914
TL082M
Vcc
OUT2
(-) 2
(+) 2
OUT1
(-) 1
(+) 1
VEE
C983
47
16V
:BP
3.6
Q905
2SC2412K
12.4
1.2
D907
MA110
0.6
R965
12k
:CHIP
R963
100
:CHIP
D910
MA110
R980
470
:CHIP
Q906
2SC2412K
R948
2.2k
:CHIP
R949
2.2k
:RN-CP
CN911
20P
H SIZE
HCENTER
HSHAPE
R900 1k :CHIP
HBLANK
HDRIVE
B3
HFOCUS
R929 1k :CHIP
-12V
C12
S4
C5
R995 1k :CHIP
FBT
C6
R991 1k :CHIP
S3
B2
VFOCUS
C9
R994 1k :CHIP
S0
C1
R997 1k :CHIP
ABL
C7
R992 1k :CHIP
S2
C3
R996 1k :CHIP
HVBSABLE
C8
R993 1k :CHIP
S1
TILT
HV.BET
R288
2.2k
:CHIP
Q907
2SC2412K
R954
1k
:CHIP
VRETRC12
VCENTER
VRAMP
B14
ROTATION
R999
STBY+12V

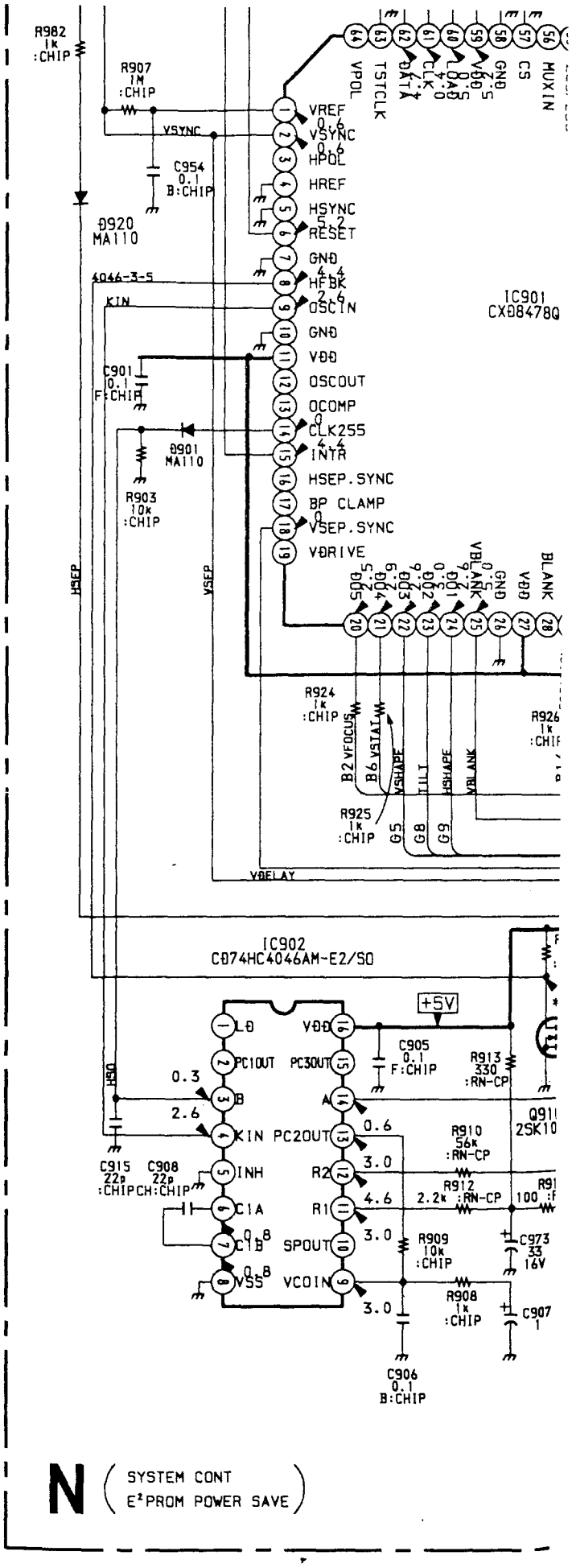

N (SYSTEM CONT
E²PROM POWER SAVE)

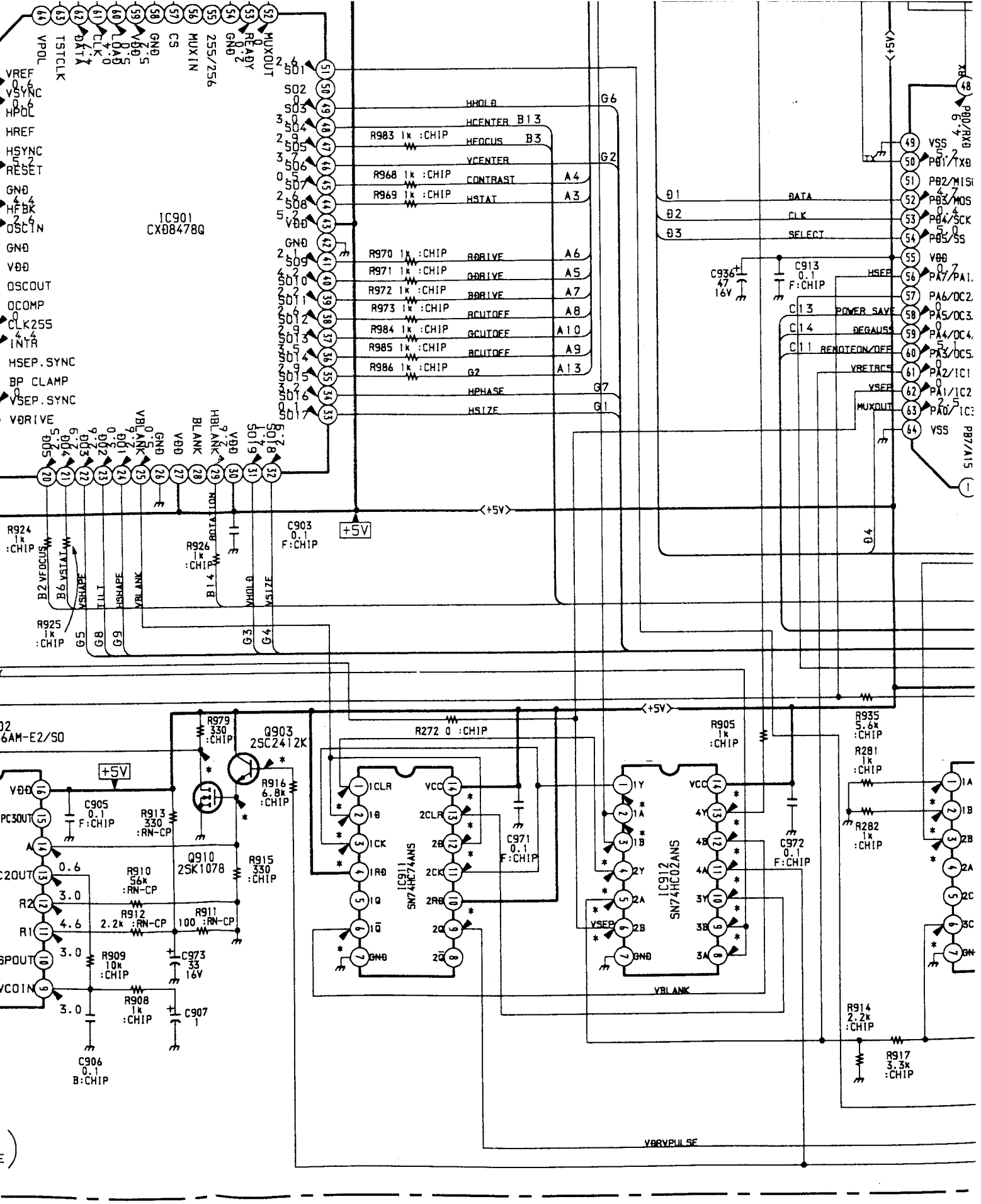
IC901
CX08478Q
VPOL
TSTCLK
DATA
CLK
LOAD
VDD
GND
CS
MUXIN
255/256
READY
MUXOUT
VREF
VSYNC
HPOL
HREF
HSYNC
RESET
HFBK
OSCIN
OSCOUT
OCOMP
CLK255
INTR
HSEP.SYNC
BP CLAMP
VSEP.SYNC
VDRIVE
HHOLD
HCENTER
HFOCUS
VCENTER
CONTRAST
HSTAT
RDRIVE
GDRIVE
BDRIVE
RCUTOFF
GCUTOFF
BCUTOFF
G2
HPHASE
HSIZE
DATA
CLK
SELECT
HSEP
POWER SAVE
DEGAUSS
REMOTEON/OFF
VBETACS
VSEP
MUXOUT
VSS
PB0/RXD
PB1/TXD
PB2/MISO
PB3/MOSI
PB4/SCK
PB5/SS
PA7/PAI
PA6/OC2
PA5/OC3
PA4/OC4
PA3/OC5
PA2/IC1
PA1/IC2
PA0/IC3
PB7/A15
R983 1k :CHIP
R968 1k :CHIP
R969 1k :CHIP
R970 1k :CHIP
R971 1k :CHIP
R972 1k :CHIP
R973 1k :CHIP
R984 1k :CHIP
R985 1k :CHIP
R986 1k :CHIP
C936 47 16V
C913 0.1 F:CHIP
C903 0.1 F:CHIP
R924 1k :CHIP
R926 1k :CHIP
R925 1k :CHIP
B2 VFOCUS
B6 VSTAT
VSHAPE
TILT
HSHAPE
VBLANK
B14 ROTATION
VHOLD
VSIZE
+5V
R979 330 :CHIP
Q903 2SC2412K
R916 6.8k :CHIP
C905 0.1 F:CHIP
R913 330 :RN-CP
Q910 2SK1078
R915 330 :CHIP
R910 56k :RN-CP
R912 2.2k :RN-CP
R911 100 :RN-CP
R909 10k :CHIP
C973 33 16V
R908 1k :CHIP
C907 1
C906 0.1 B:CHIP
R272 0 :CHIP
IC911 SN74HC74ANS
C971 0.1 F:CHIP
IC912 SN74HC02ANS
C972 0.1 F:CHIP
R905 1k :CHIP
R935 5.6k :CHIP
R281 1k :CHIP
R282 1k :CHIP
R914 2.2k :CHIP
R917 3.3k :CHIP
VBLANK
V0RVPULSE

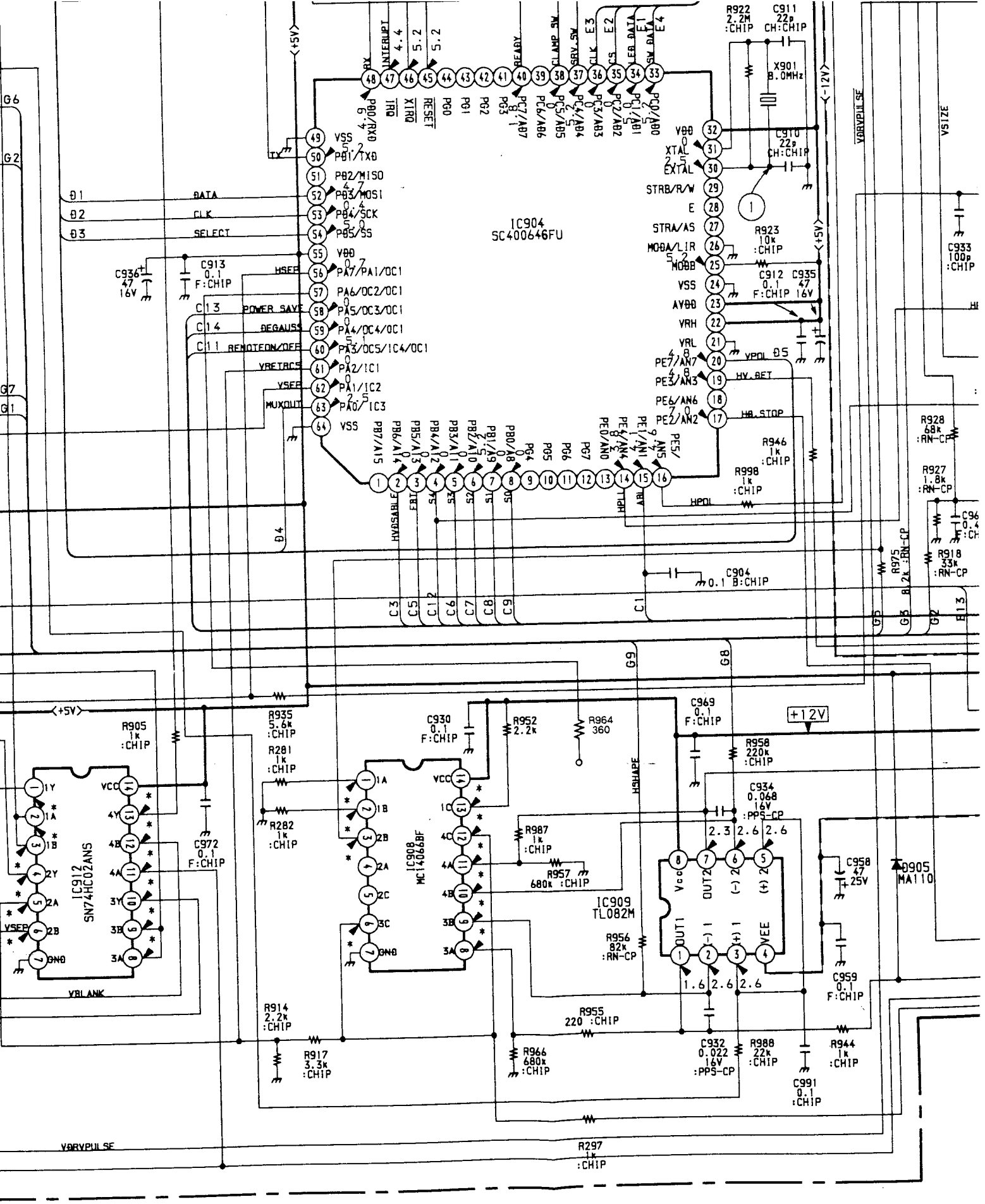
IC904
SC400646FU
IC912
SN74HC02ANS
IC908
MC14066BF
IC909
TL082M
X901
8.0MHz
+5V
+12V
-12V
DATA
CLK
SELECT
POWER SAVE
DEGAUSS
REMOTEON/OFF
VRETRCS
VSEP
MUXOUT
HSEP
VBLANK
VARVPULSE
VSIZE
HV.BFT
HB.STOP
HPOL
VPOL
HSHAPE
C904 0.1 B:CHIP
C913 0.1 F:CHIP
C936 47 16V
C910 22p CH:CHIP
C911 22p CH:CHIP
C912 0.1 F:CHIP
C935 47 16V
C933 100p :CHIP
C930 0.1 F:CHIP
C969 0.1 F:CHIP
C934 0.068 16V :PPS-CP
C958 47 25V
C959 0.1 F:CHIP
C932 0.022 16V :PPS-CP
C991 0.1 :CHIP
C972 0.1 F:CHIP
R922 2.2M :CHIP
R923 10k :CHIP
R928 68k :RN-CP
R927 1.8k :RN-CP
R918 33k :RN-CP
R975 8.2k :RN-CP
R946 1k :CHIP
R998 1k :CHIP
R905 1k :CHIP
R935 5.6k :CHIP
R281 1k :CHIP
R282 1k :CHIP
R952 2.2k
R964 360
R987 1k :CHIP
R957 680k :CHIP
R958 220k :CHIP
R956 82k :RN-CP
R955 220 :CHIP
R914 2.2k :CHIP
R917 3.3k :CHIP
R966 680k :CHIP
R988 22k :CHIP
R944 1k :CHIP
R297 1k :CHIP
D905 MA110

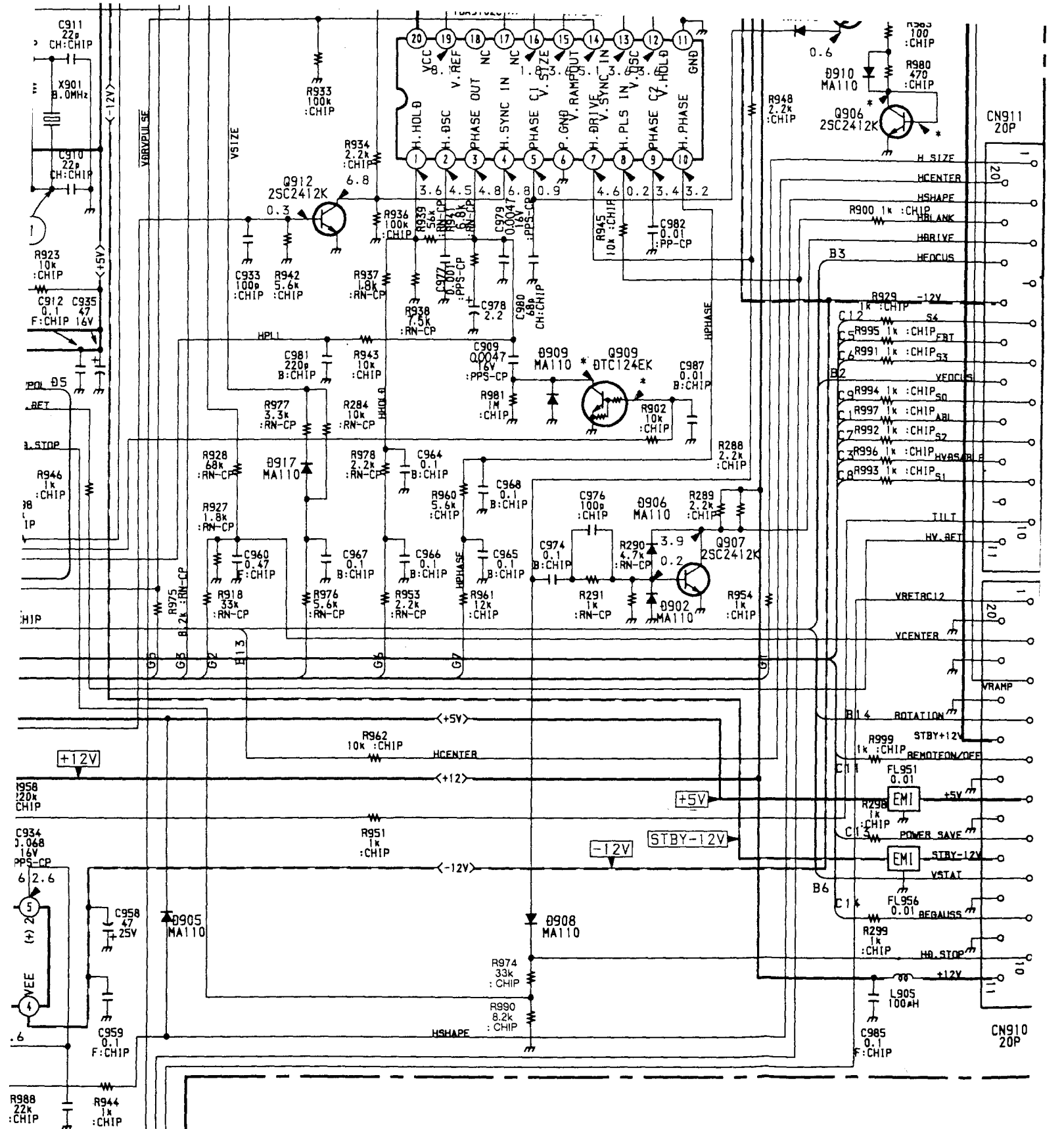
CN911
20P
CN910
20P
Q912
2SC2412K
Q906
2SC2412K
Q909
DTC124EK
Q907
2SC2412K
X901
8.0MHz
H.HOLD
H.OSC
PHASE OUT
H.SYNC IN
PHASE C1
P.GND
H.DRIVE
H.PLS IN
PHASE C2
H.PHASE
VCC
V.REF
NC
NC
V.SIZE
V.RAMP OUT
V.SYNC IN
V.OSC
V.HOLD
GND
H SIZE
HCENTER
HSHAPE
HBLANK
HDRIVE
HFOCUS
VFOCUS
TILT
HV.BET
VRETRC12
VCENTER
VRAMP
ROTATION
STBY+12V
REMOTEON/OFF
POWER SAVE
STBY-12V
VSTAT
DEGAUSS
HD.STOP
+12V
+5V
-12V
STBY-12V
HCENTER
HSHAPE
VSIZE
VDRVPULSE
HPLL
HPHASE
EMI
EMI

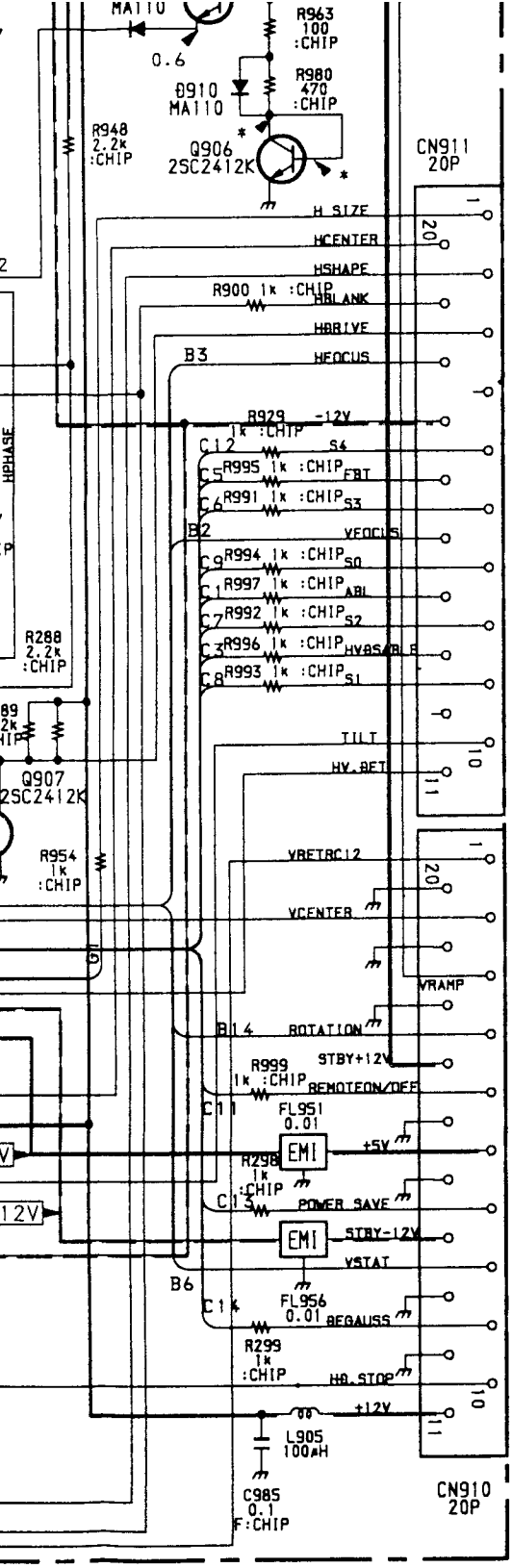
MA110
0.6
R963
100
:CHIP
D910
MA110
R980
470
:CHIP
R948
2.2k
:CHIP
Q906
2SC2412K
CN911
20P
H SIZE
HCENTER
HSHAPE
R900 1k :CHIP
HBLANK
HDRIVE
B3
HFOCUS
R929 1k :CHIP
-12V
C12
S4
C5
R995 1k :CHIP
FBT
C6
R991 1k :CHIP
S3
B2
VFOCUS
C9
R994 1k :CHIP
S0
C1
R997 1k :CHIP
ABL
C7
R992 1k :CHIP
S2
C3
R996 1k :CHIP
HVBSABLE
C8
R993 1k :CHIP
S1
R288
2.2k
:CHIP
TILT
HV.BFT
Q907
2SC2412K
R954
1k
:CHIP
VRETRC12
VCENTER
VRAMP
B14
ROTATION
STBY+12V
R999
1k :CHIP
REMOTEON/OFF
C11
FL951
0.01
EMI
+5V
R298
1k
:CHIP
C15
POWER SAVE
EMI
STBY-12V
VSTAT
B6
C14
FL956
0.01
DEGAUSS
R299
1k
:CHIP
HB.STOP
+12V
L905
100μH
C985
0.1
F:CHIP
CN910
20P

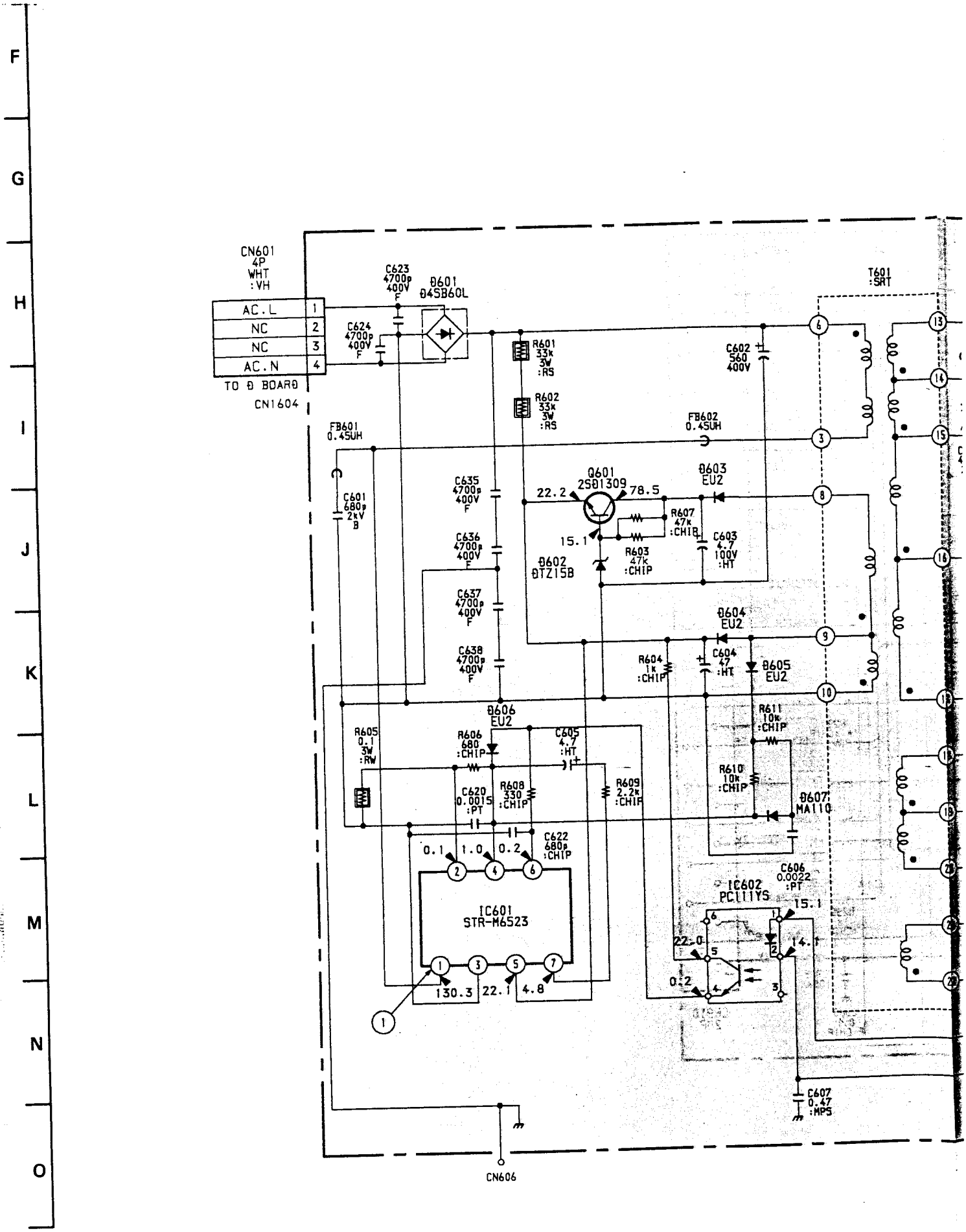

Schematic diagram

← N board

Schematic diagrams

G M H boards →

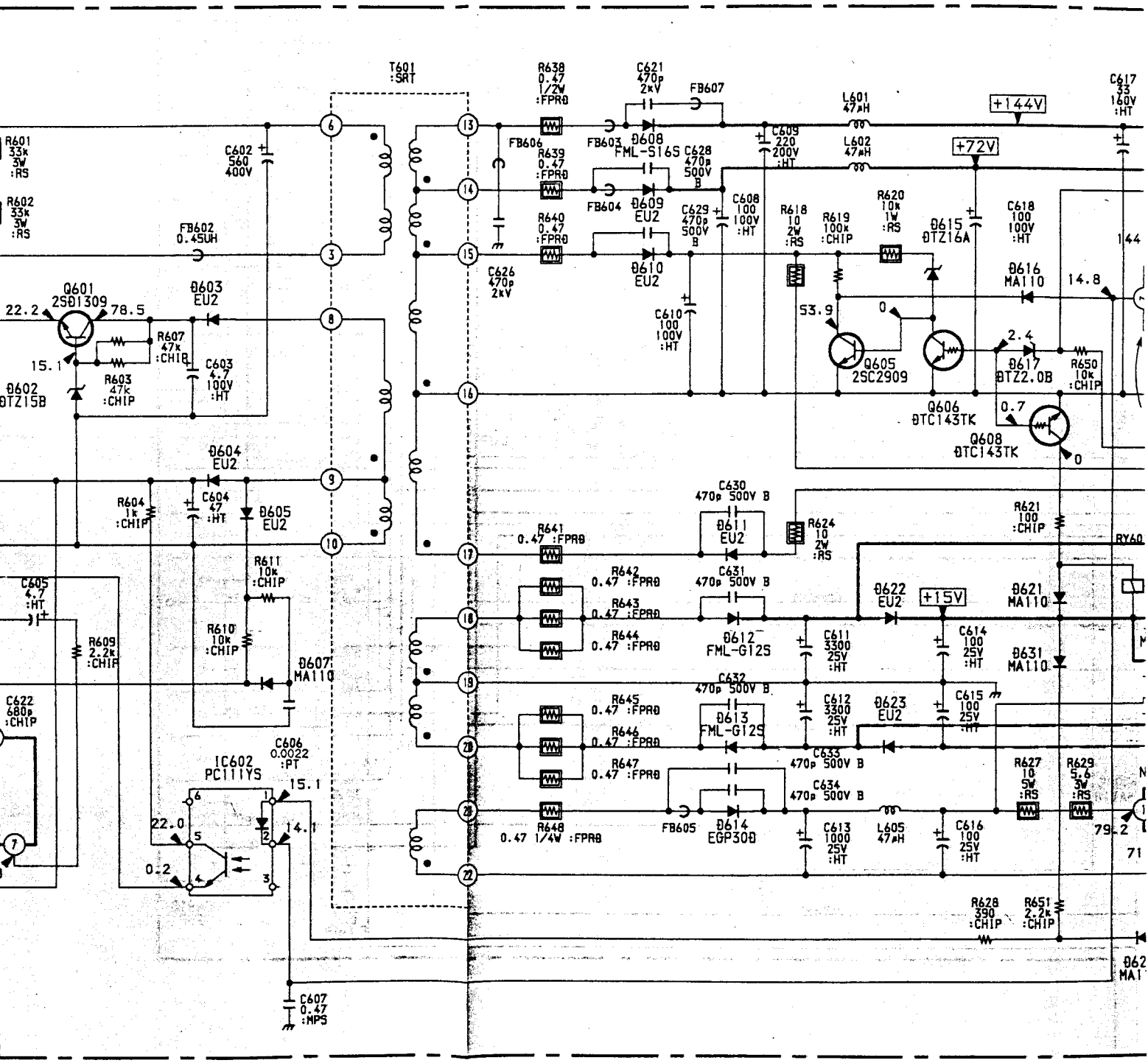

Schematic diagrams

G M H boards ➡

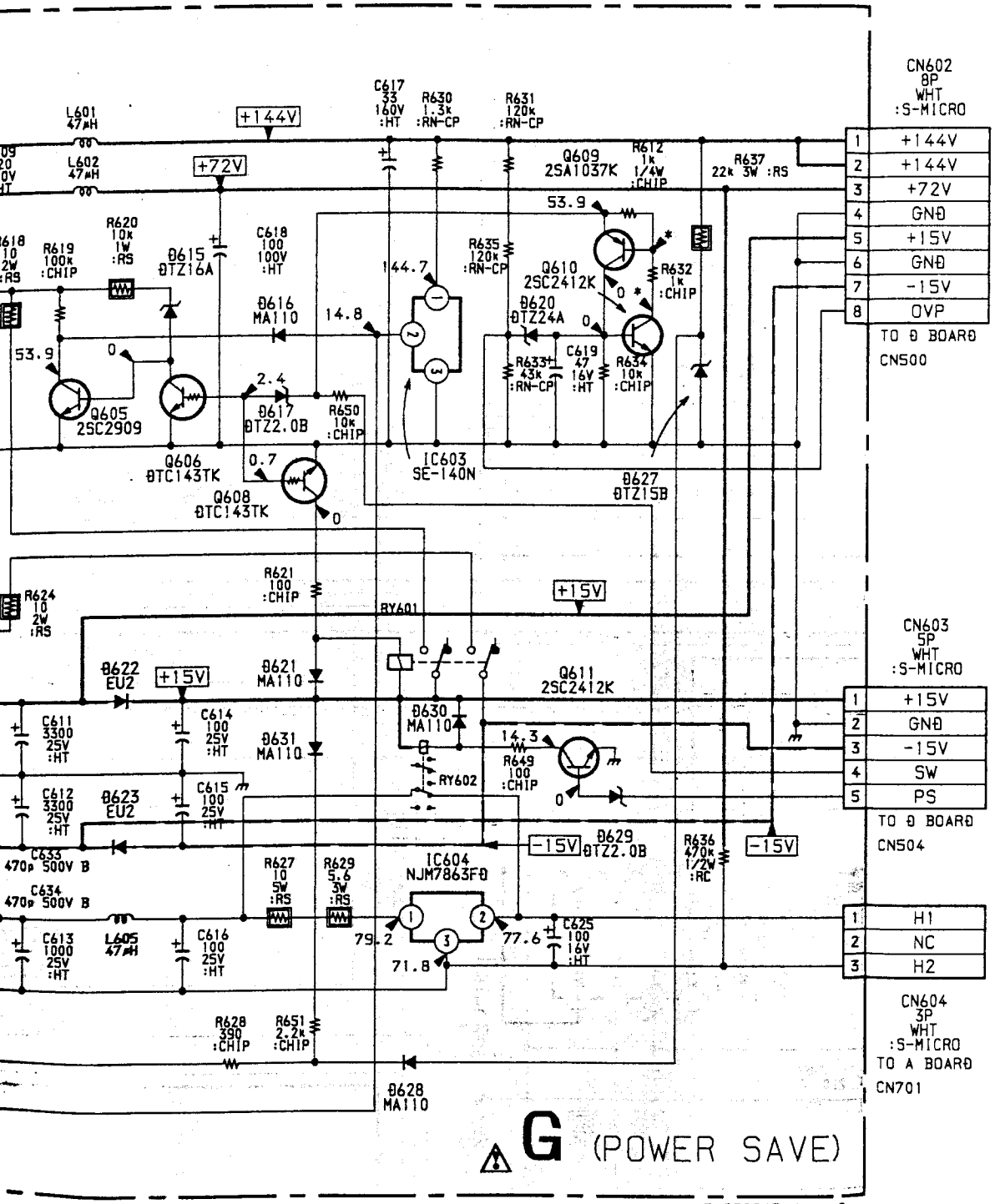
CN602
8P
WHT
:S-MICRO
1 +144V
2 +144V
3 +72V
4 GND
5 +15V
6 GND
7 -15V
8 OVP
TO D BOARD
CN500
CN603
5P
WHT
:S-MICRO
1 +15V
2 GND
3 -15V
4 SW
5 PS
TO D BOARD
CN504
CN604
3P
WHT
:S-MICRO
TO A BOARD
CN701
1 H1
2 NC
3 H2
+144V
+72V
+15V
-15V
L601 47μH
L602 47μH
C617 33 160V :HT
R630 1.3k :RN-CP
R631 120k :RN-CP
Q609 2SA1037K
R612 1k 1/4W :CHIP
R637 22k 3W :RS
R620 10k 1W :RS
R619 100k :CHIP
D615 DTZ16A
C618 100 100V :HT
R635 120k :RN-CP
Q610 2SC2412K
R632 1k :CHIP
D616 MA110
D620 DTZ24A
R633 43k :RN-CP
C619 47 16V :HT
R634 10k :CHIP
Q605 2SC2909
D617 DTZ2.0B
R650 10k :CHIP
Q606 DTC143TK
Q608 DTC143TK
IC603 SE-140N
D627 DTZ15B
R624 10 2W :RS
R621 100 :CHIP
RY601
D622 EU2
D621 MA110
Q611 2SC2412K
C611 3300 25V :HT
C614 100 25V :HT
D630 MA110
D631 MA110
R649 100 :CHIP
RY602
C612 3300 25V :HT
D623 EU2
C615 100 25V :HT
C633 470p 500V B
D629 DTZ2.0B
R636 470k 1/2W :RC
C634 470p 500V B
R627 10 5W :RS
R629 5.6 3W :RS
IC604 NJM7863FD
C613 1000 25V :HT
L605 47μH
C616 100 25V :HT
C625 100 16V :HT
R628 390 :CHIP
R651 2.2k :CHIP
D628 MA110
G (POWER SAVE)
B-SS8243<J..>-G..
D201 SEL1422G-C.
POWER
R210 470 :CHIP

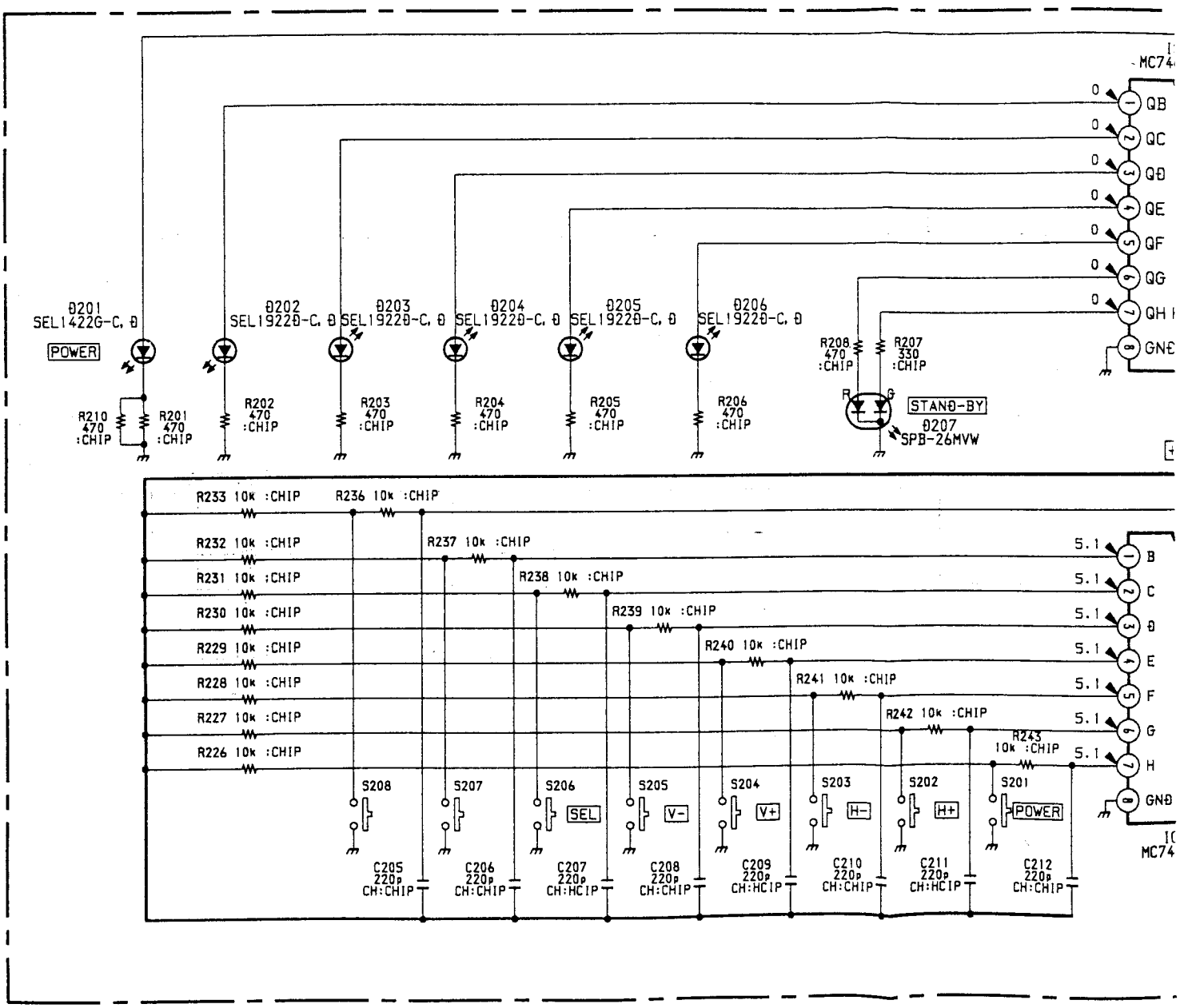
MC74
QB
QC
QD
QE
QF
QG
QH
GND
D201
SEL1422G-C, D
POWER
D202
SEL1922D-C, D
D203
SEL1922D-C, D
D204
SEL1922D-C, D
D205
SEL1922D-C, D
D206
SEL1922D-C, D
R208
470
:CHIP
R207
330
:CHIP
R210
470
:CHIP
R201
470
:CHIP
R202
470
:CHIP
R203
470
:CHIP
R204
470
:CHIP
R205
470
:CHIP
R206
470
:CHIP
STAND-BY
D207
SPB-26MVW
R233 10k :CHIP
R236 10k :CHIP
R232 10k :CHIP
R237 10k :CHIP
R231 10k :CHIP
R238 10k :CHIP
R230 10k :CHIP
R239 10k :CHIP
R229 10k :CHIP
R240 10k :CHIP
R228 10k :CHIP
R241 10k :CHIP
R227 10k :CHIP
R242 10k :CHIP
R226 10k :CHIP
R243
10k :CHIP
5.1
B
C
D
E
F
G
H
GND
S208
S207
S206
SEL
S205
V-
S204
V+
S203
H-
S202
H+
S201
POWER
C205
220p
CH:CHIP
C206
220p
CH:CHIP
C207
220p
CH:HCIP
C208
220p
CH:CHIP
C209
220p
CH:HCIP
C210
220p
CH:CHIP
C211
220p
CH:HCIP
C212
220p
CH:CHIP
MC74

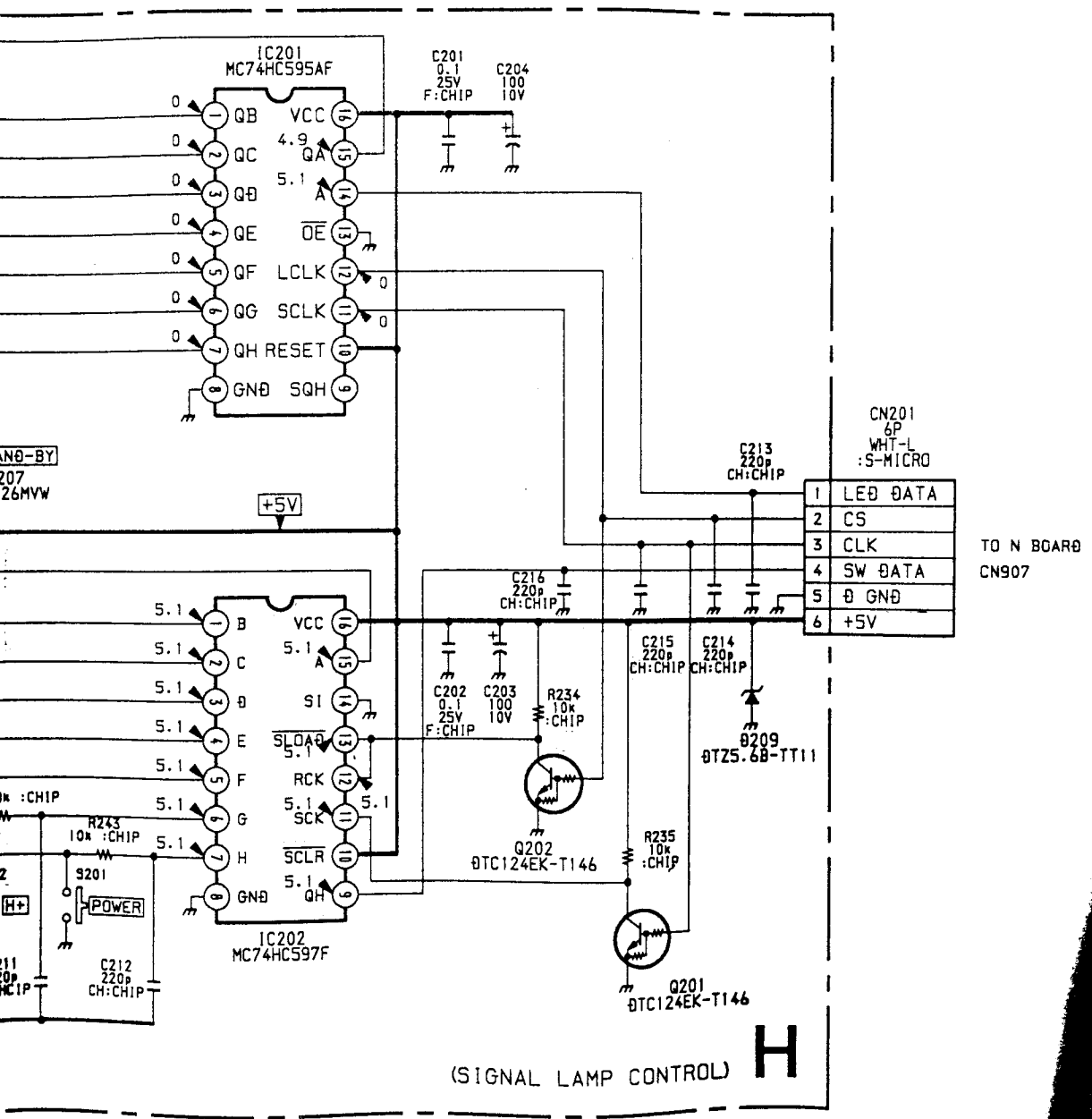
IC201
MC74HC595AF
QB
QC
QD
QE
QF
QG
QH
GND
VCC
QA
A
OE
LCLK
SCLK
RESET
SQH
C201
0.1
25V
F:CHIP
C204
100
10V
+5V
C213
220p
CH:CHIP
CN201
6P
WHT-L
:S-MICRO
1 LED DATA
2 CS
3 CLK
4 SW DATA
5 D GND
6 +5V
TO N BOARD
CN907
C216
220p
CH:CHIP
B
C
D
E
F
G
H
VCC
A
SI
SLOAD
RCK
SCK
SCLR
QH
GND
IC202
MC74HC597F
C202
0.1
25V
F:CHIP
C203
100
10V
R234
10k
:CHIP
C215
220p
CH:CHIP
C214
220p
CH:CHIP
D209
DTZ5.6B-TT11
Q202
DTC124EK-T146
R235
10k
:CHIP
Q201
DTC124EK-T146
R243
10k :CHIP
S201
POWER
C212
220p
CH:CHIP
(SIGNAL LAMP CONTROL)
H

G BOARD WAVEFORM

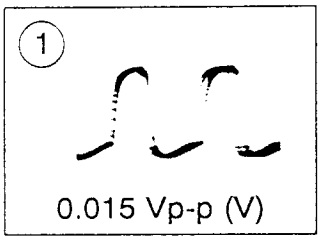

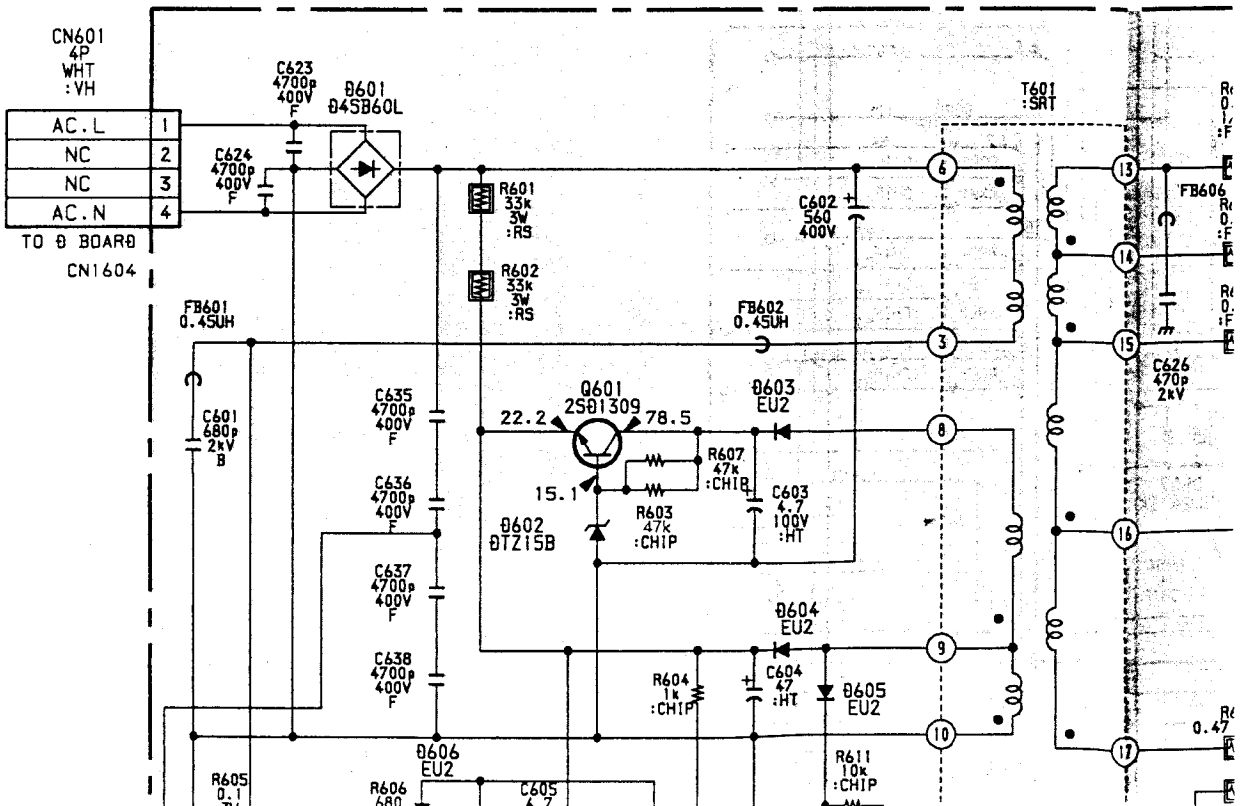

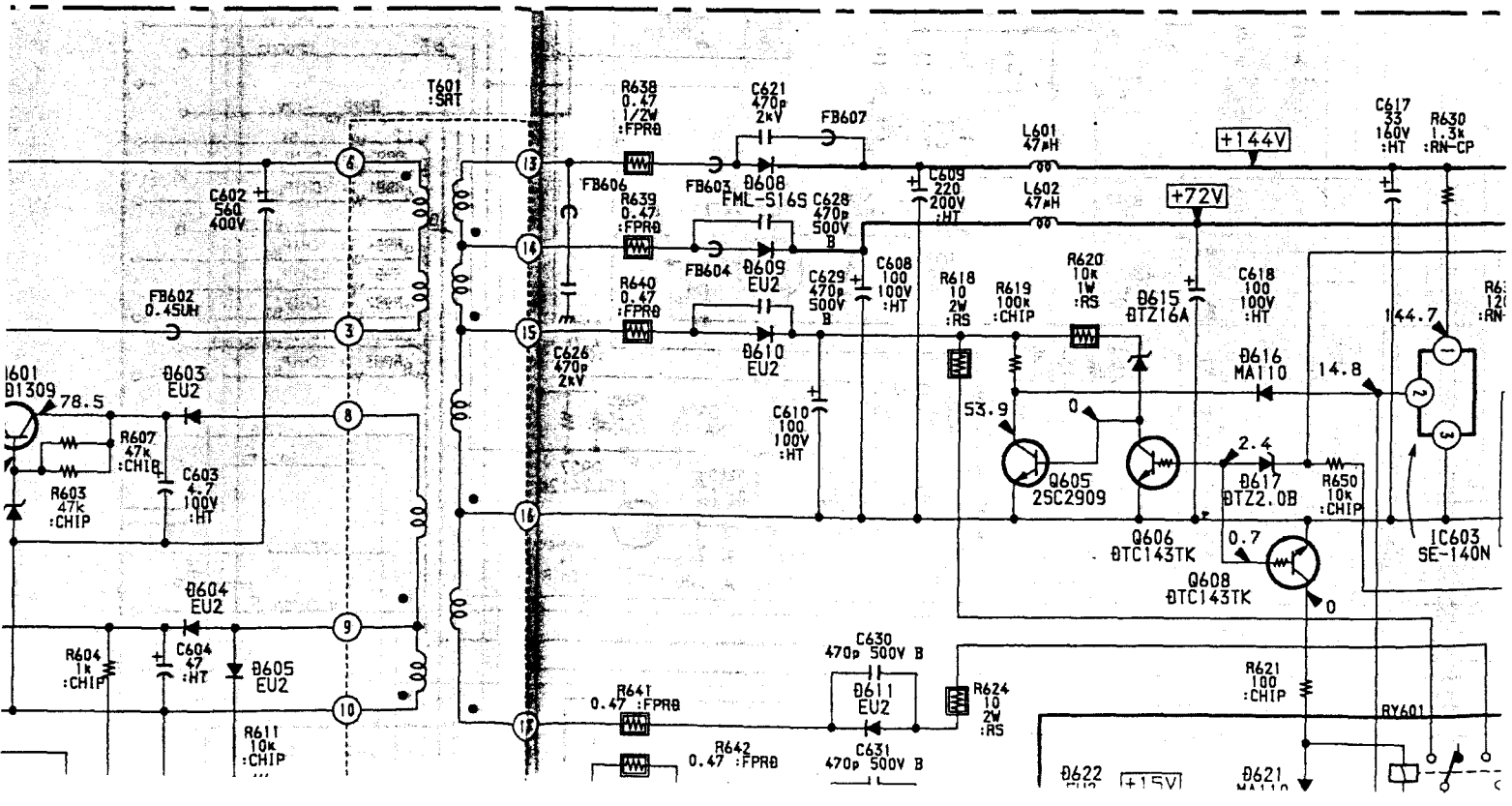
6
7
8
9
10
11
12
13
T601
:SAT
R638
0.47
1/2W
:FPRB
C621
470p
2kV
FB607
L601
47μH
+144V
C617
33
160V
:HT
R630
1.3k
:RN-CP
C602
560
400V
FB606
FB603
D608
FML-S16S
C628
470p
500V
B
L609
220
200V
:HT
L602
47μH
+72V
R639
0.47
:FPRB
FB604
D609
EU2
C629
470p
500V
B
C608
100
100V
:HT
R618
10
2W
:RS
R619
100k
:CHIP
R620
10k
1W
:RS
D615
BTZ16A
C618
100
100V
:HT
FB602
0.45UH
R640
0.47
:FPRB
D610
EU2
C626
470p
2kV
D616
MA110
144.7
14.8
D603
EU2
78.5
R607
47k
:CHIP
C603
4.7
100V
:HT
R603
47k
:CHIP
C610
100
100V
:HT
53.9
0
Q605
2SC2909
2.4
D617
BTZ2.0B
R650
10k
:CHIP
Q606
BTC143TK
0.7
Q608
BTC143TK
IC603
SE-140N
D604
EU2
R604
1k
:CHIP
C604
47
:HT
D605
EU2
C630
470p 500V B
D611
EU2
R624
10
2W
:RS
R621
100
:CHIP
RY601
R641
0.47 :FPRB
R611
10k
:CHIP
R642
0.47 :FPRB
C631
470p 500V B
D622
+15V
D621

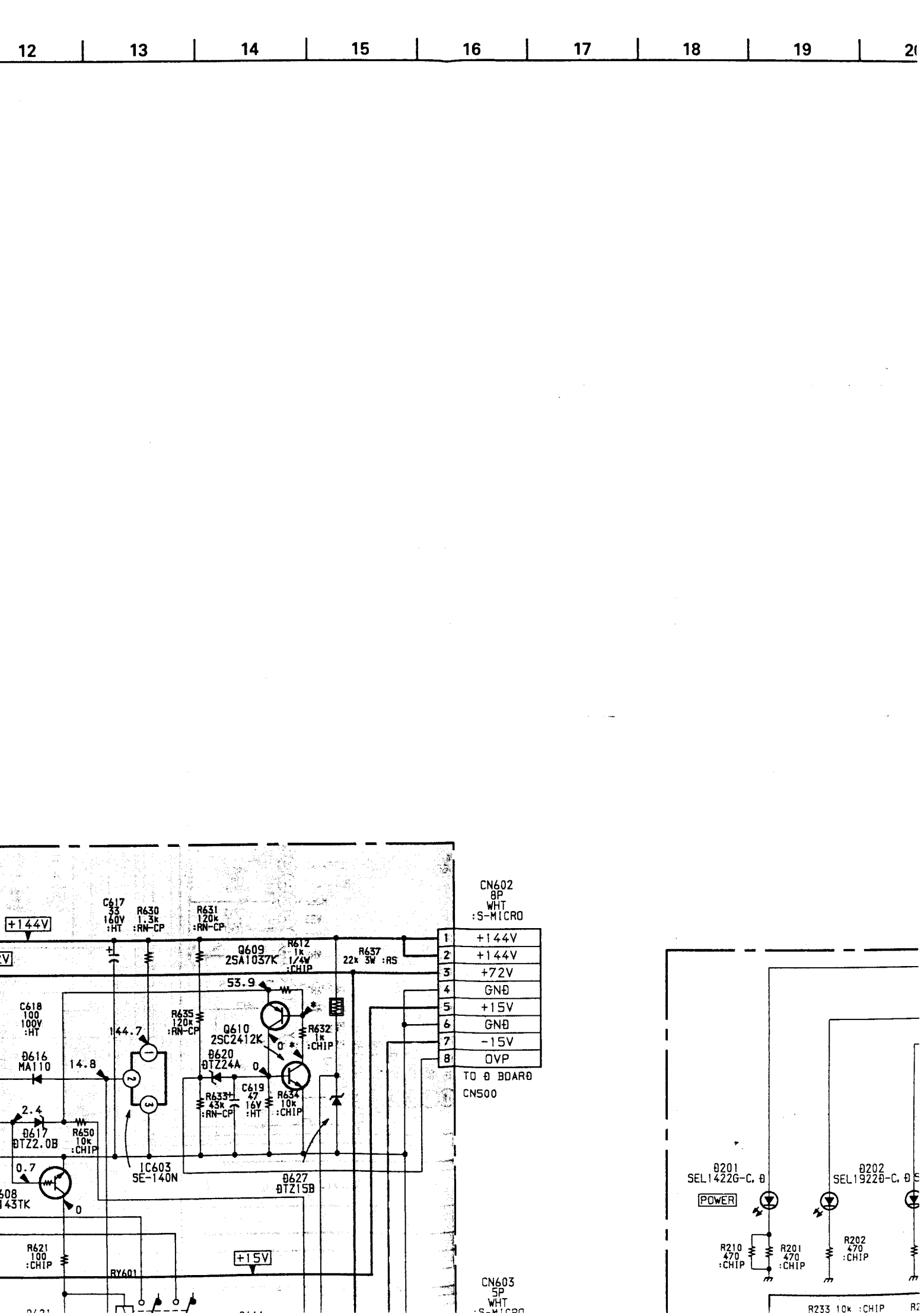
12
13
14
15
16
17
18
19
+144V
C617
33
160V
:HT
R630
1.3k
:RN-CP
R631
120k
:RN-CP
Q609
2SA1037K
R612
1k
1/4W
:CHIP
R637
22k 3W :RS
53.9
C618
100
100V
:HT
R635
120k
:RN-CP
144.7
Q610
2SC2412K
R632
1k
:CHIP
D616
MA110
14.8
D620
DTZ24A
C619
47
16V
:HT
R633
43k
:RN-CP
R634
10k
:CHIP
2.4
D617
DTZ2.0B
R650
10k
:CHIP
0.7
IC603
SE-140N
D627
DTZ15B
R621
100
:CHIP
+15V
RY601
CN602
8P
WHT
:S-MICRO
1 +144V
2 +144V
3 +72V
4 GND
5 +15V
6 GND
7 -15V
8 OVP
TO D BOARD
CN500
CN603
5P
WHT
:S-MICRO
D201
SEL1422G-C, D
POWER
D202
SEL1922D-C, D
R210
470
:CHIP
R201
470
:CHIP
R202
470
:CHIP
R233 10k :CHIP

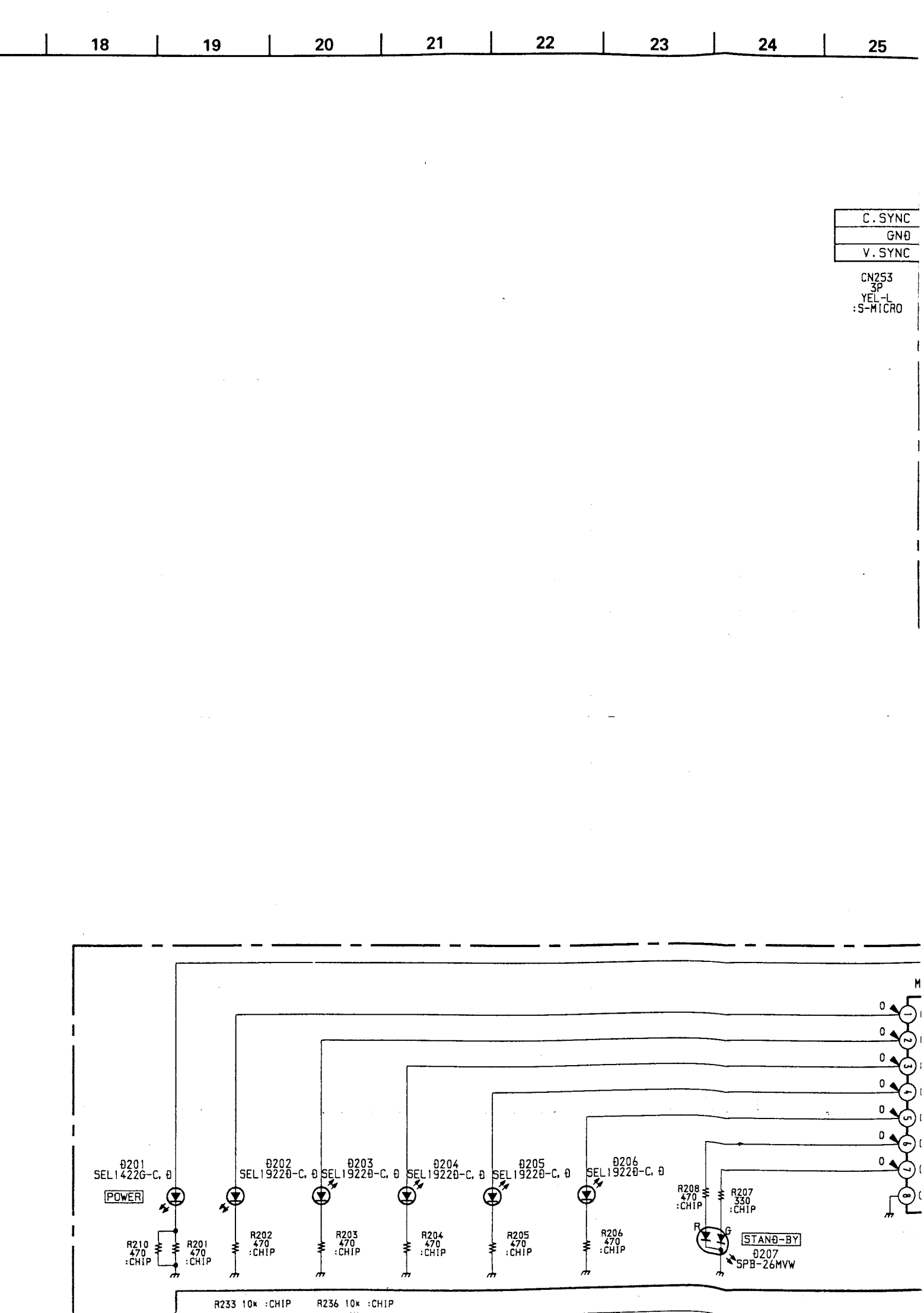
18
19
20
21
22
23
24
25
C.SYNC
GND
V.SYNC
CN253
3P
YEL-L
:S-MICRO
D201
SEL1422G-C, D
POWER
D202
SEL1922D-C, D
D203
SEL1922D-C, D
D204
SEL1922D-C, D
D205
SEL1922D-C, D
D206
SEL1922D-C, D
R210
470
:CHIP
R201
470
:CHIP
R202
470
:CHIP
R203
470
:CHIP
R204
470
:CHIP
R205
470
:CHIP
R206
470
:CHIP
R208
470
:CHIP
R207
330
:CHIP
R
G
STAND-BY
D207
SPB-26MVW
R233 10k :CHIP
R236 10k :CHIP

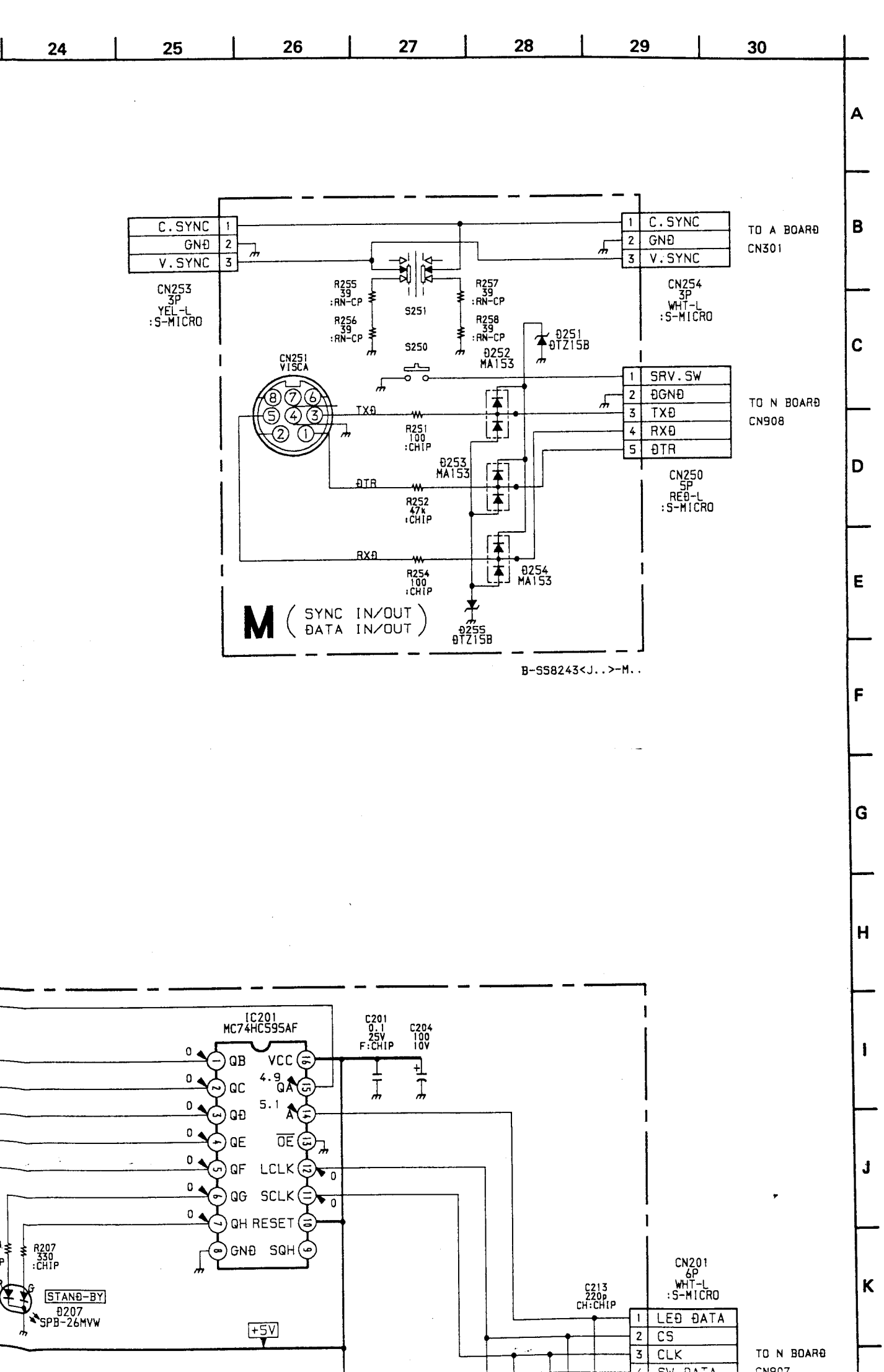
24
25
26
27
28
29
30
A
B
C
D
E
F
G
H
I
J
K
C.SYNC 1
GND 2
V.SYNC 3
CN253
3P
YEL-L
:S-MICRO
R255
39
:RN-CP
R256
39
:RN-CP
S251
R257
39
:RN-CP
R258
39
:RN-CP
S250
D251
DTZ15B
D252
MA153
CN251
VISCA
TXD
R251
100
:CHIP
DTR
R252
47k
:CHIP
RXD
R254
100
:CHIP
D253
MA153
D254
MA153
D255
DTZ15B
M
(SYNC IN/OUT
DATA IN/OUT)
1 C.SYNC
2 GND
3 V.SYNC
TO A BOARD
CN301
CN254
3P
WHT-L
:S-MICRO
1 SRV.SW
2 DGND
3 TXD
4 RXD
5 DTR
TO N BOARD
CN908
CN250
5P
RED-L
:S-MICRO
B-SS8243<J..>-M..
IC201
MC74HCS95AF
QB
QC
QD
QE
QF
QG
QH
GND
VCC
QA
A
OE
LCLK
SCLK
RESET
SQH
C201
0.1
25V
F:CHIP
C204
100
10V
R207
330
:CHIP
STAND-BY
D207
SPB-26MVW
+5V
C213
220p
CH:CHIP
CN201
6P
WHT-L
:S-MICRO
1 LED DATA
2 CS
3 CLK
TO N BOARD

H [SIGNAL LAMP CONTROL] **M** [DATA IN/OUT]

– H Board (Conductor Side) –

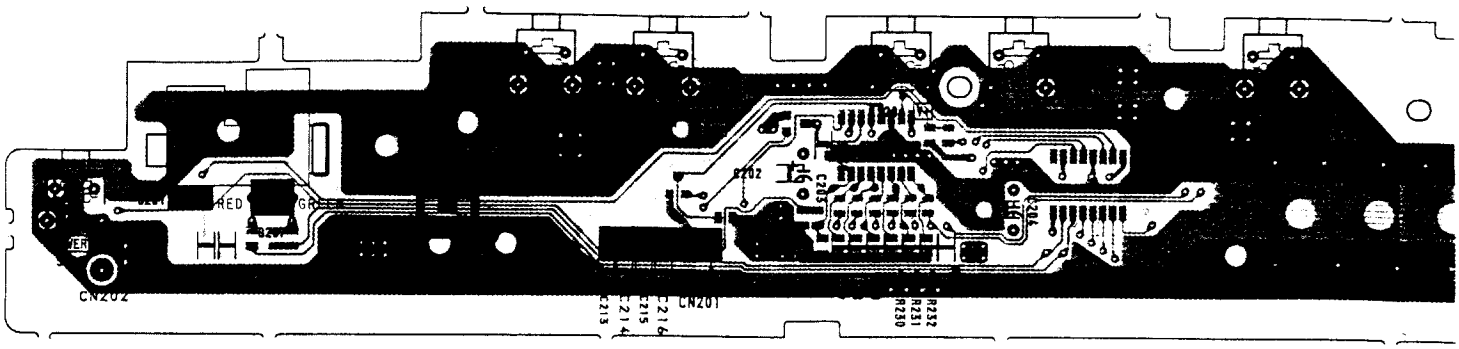

– H Board (Component Side) –

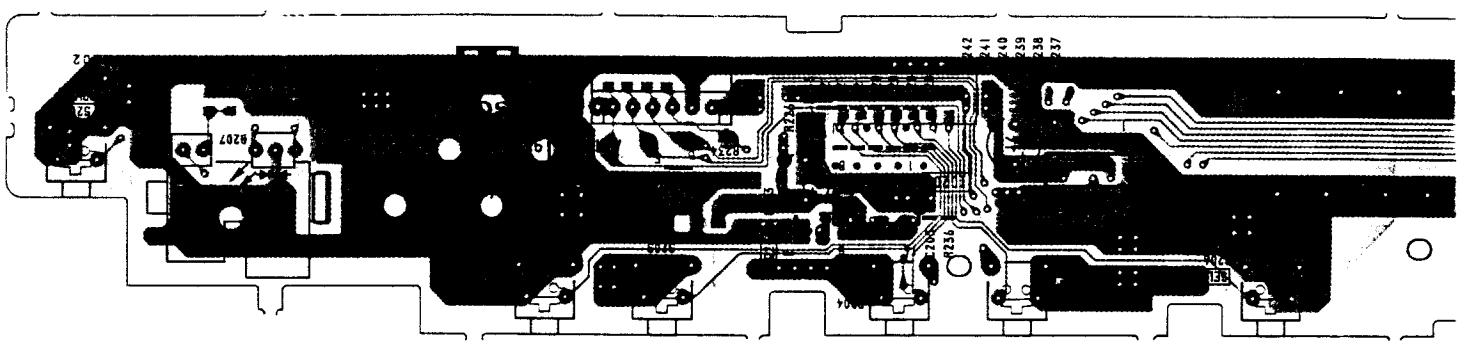

– M Board (Conductor Side) –

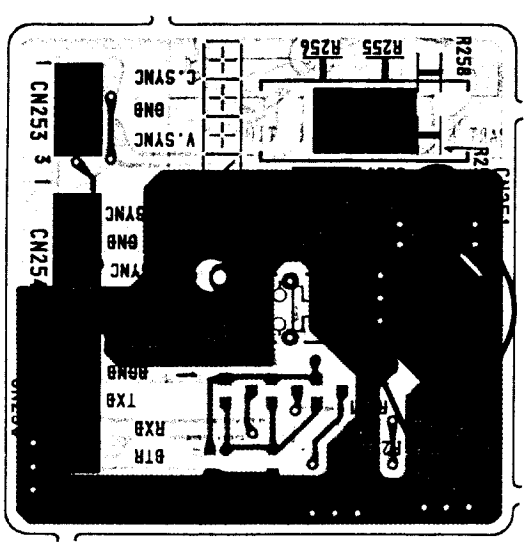

– M Board (Component Side) –

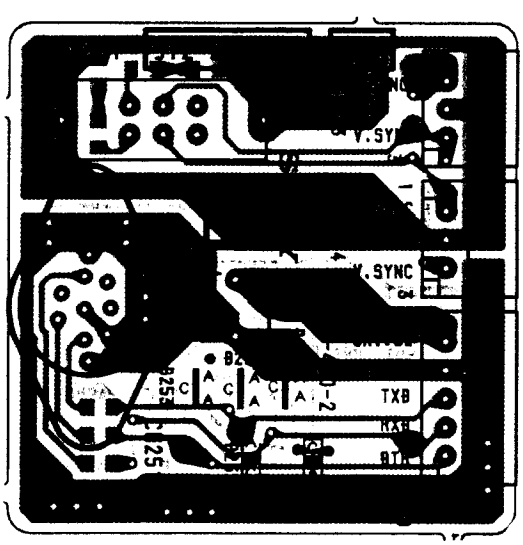

H [SIGNAL LAMP CONTROL] **M** [DATA IN/OUT]

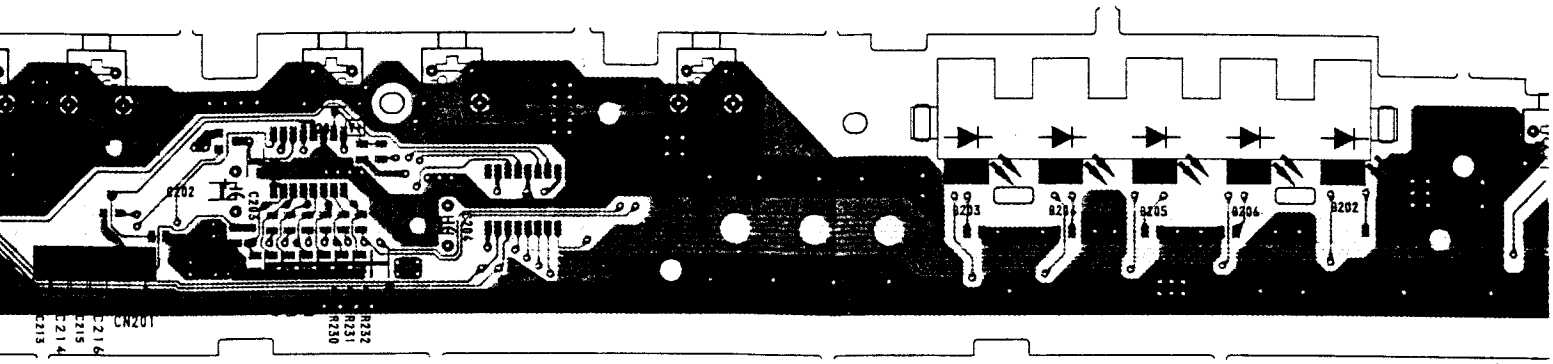

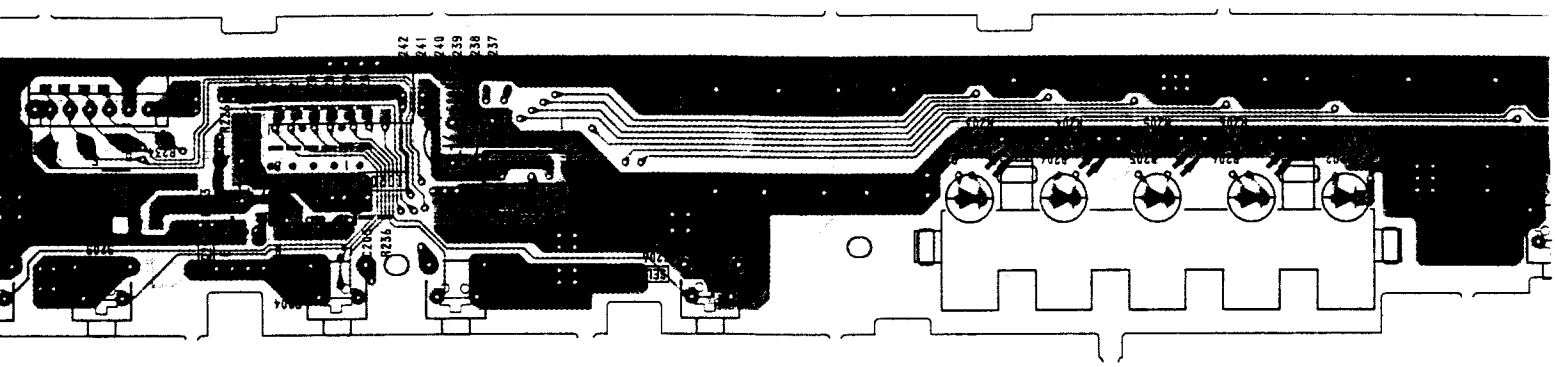

– M Board (Component Side) –

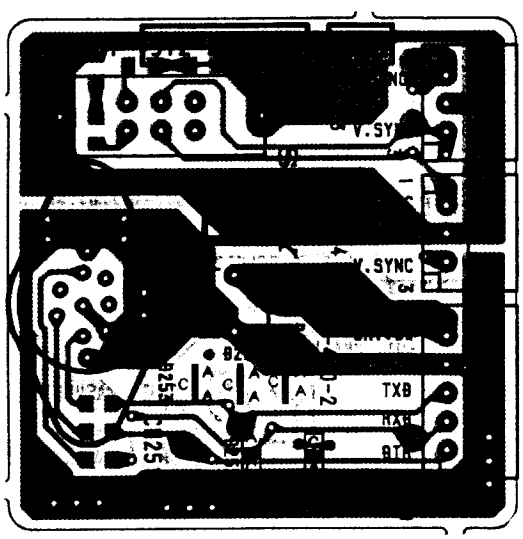

– G Board (Conductor Side) –

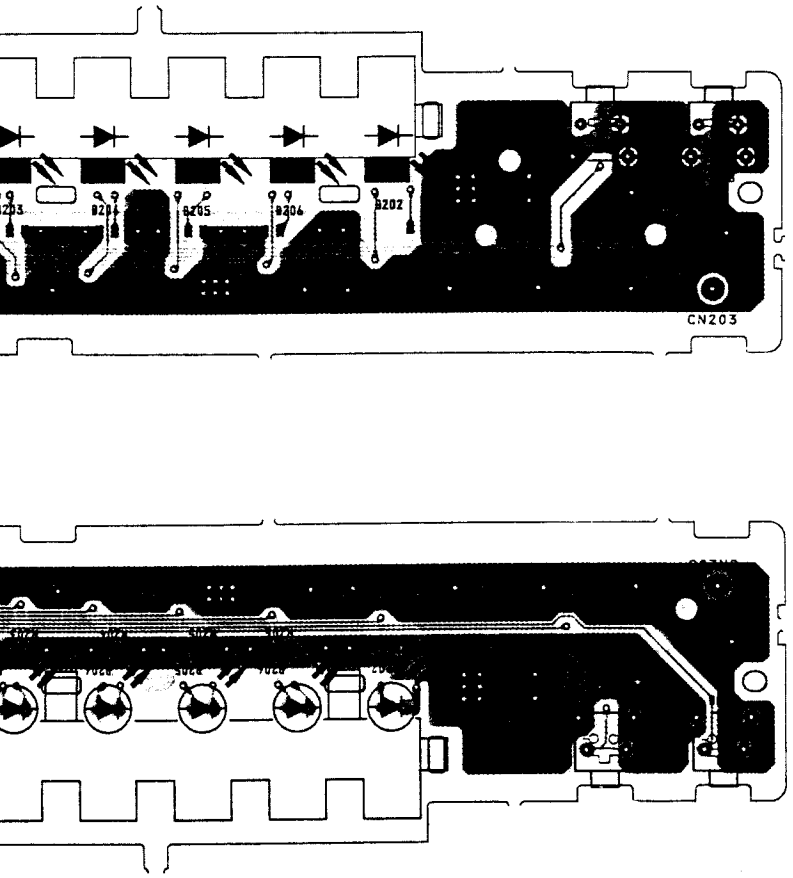

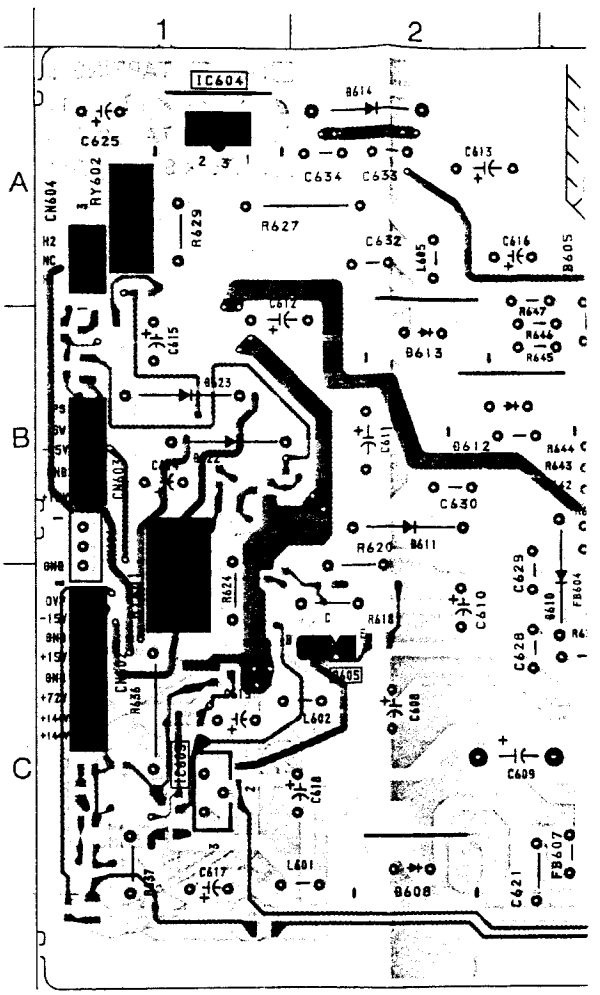

- ▒▒▒▒ : Pattern from the side which enables seeing.
- ▒▒▒▒ : Pattern of the rear side.

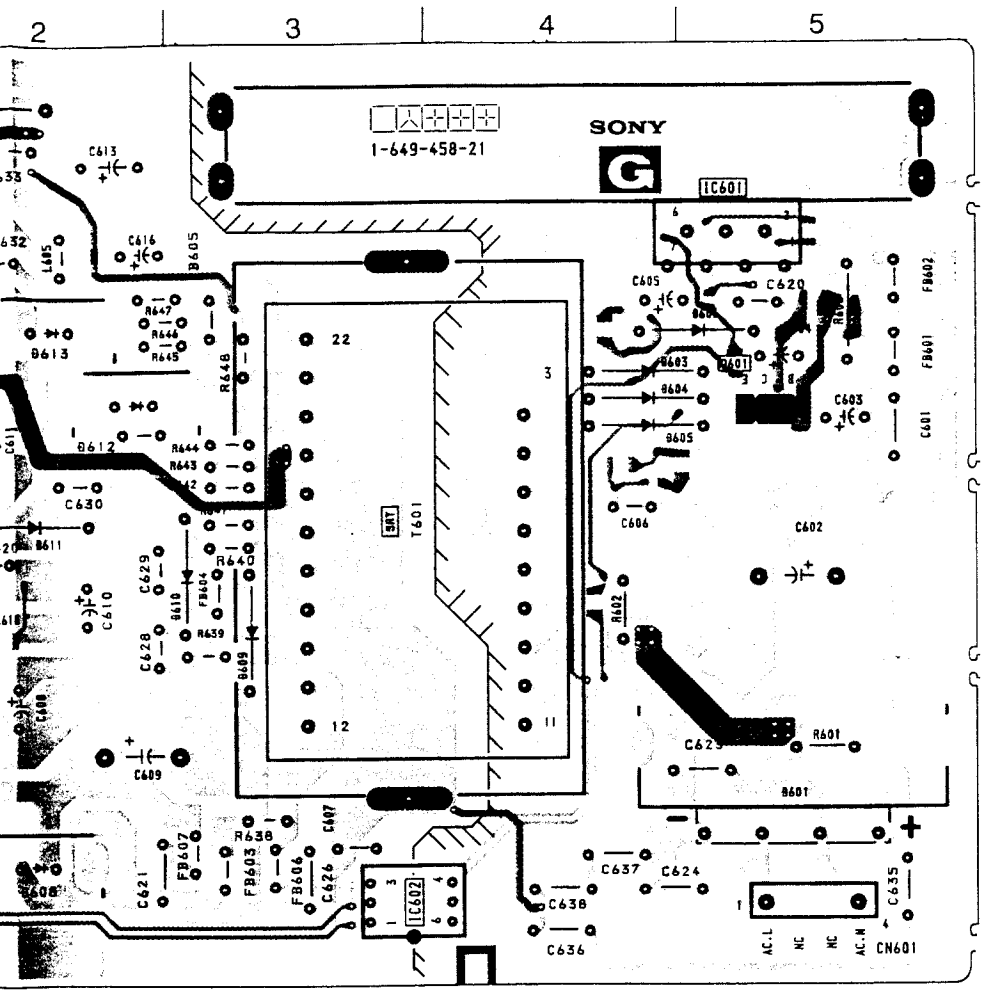

ch enables seeing.

• G BOARD

IC	(Conductor Side)	(Component Side)
IC601	A – 5	A – 1
IC602	C – 3	C – 3
IC603	C – 1	C – 5
IC604	A – 1	A – 5

TRANSISTOR	(Conductor Side)	(Component Side)
Q601	B – 5	B – 1
Q605	C – 2	C – 5
Q606		C – 5
Q608		B – 5
Q609		C – 5
Q610		C – 5
Q611		B – 5

DIODE	(Conductor Side)	(Component Side)
D601	C – 5	C – 1
D602		A – 1
D603	B – 4	B – 2
D604	B – 4	B – 2
D605	B – 4	B – 2
D606	B – 5	B – 1
D607		B – 2
D608	C – 2	C – 4
D609	C – 3	C – 3
D610	C – 3	C – 4
D611	B – 2	B – 4
D612	B – 2	B – 4
D613	B – 2	B – 4
D614	A – 2	A – 4
D615		C – 5
D616		C – 5
D617		B – 5
D620		C – 5
D621		B – 5
D622	B – 1	B – 5
D623	B – 1	B – 5
D627		C – 5
D628		C – 5
D629		B – 5
D630		A – 5
D631		C – 5

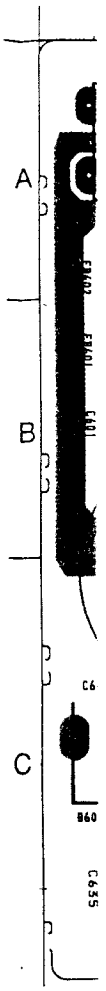

E]

– G Board (Component Side) –

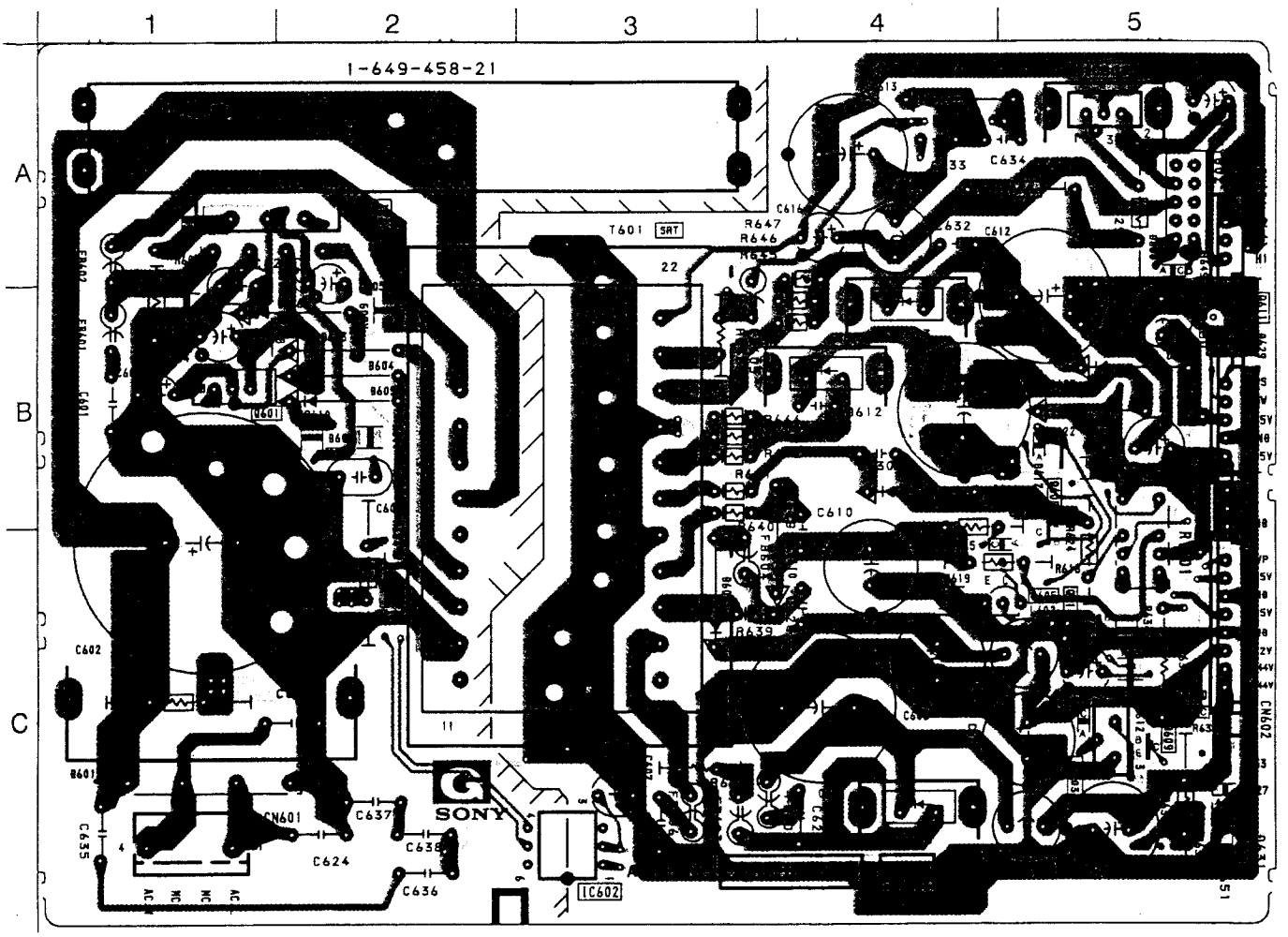

- : Pattern from the side which enables seeing.
- : Pattern of the rear side.

5-5. SEMICONDUCTORS

CXA1544P

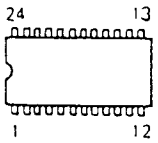

CXA1616S

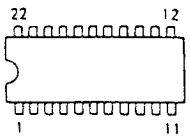

LA6500-FA

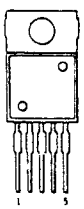

LM358P
LM2903DQ
LM2903P
SN751701PS-ELL2000
TL082ACP
TL082CP
μPC358C

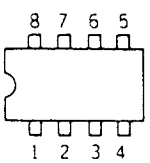

LM7912CT
MC7908CT
MC7912CT
NJM79M08FA

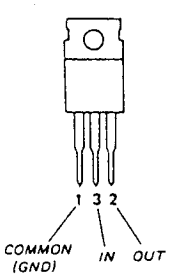

MC14066BF
MC74HC00AF
SN74HC02ANS

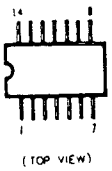

MC74HC595AF
MC74HC597F-T2

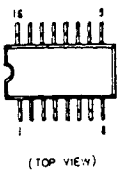

MC7805CT

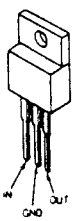

NJM78L05A

RC4558PS
TL082CPS
TL082M

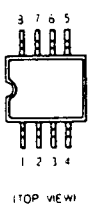

SN74HC74ANS

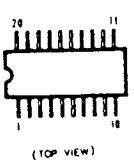

TC4049BP

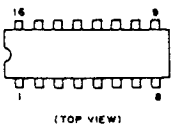

TDA8172

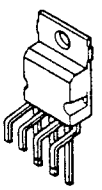

TDA9102C

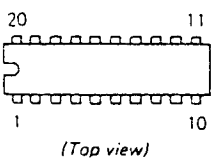

TL431CLP

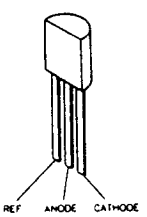

PC111YS

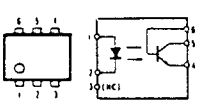

DTC124EK
DTC143TK
2SA1037K-QR
2SA1162-Q
2SC1623-L5L6
2SC2412K-QR

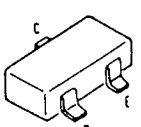

IRFI9620
2SC3746

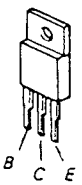

2SA1175-HFE
2SA1309A
2SC2785-HFE
2SC3311A

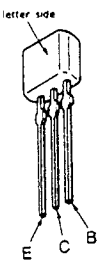

2SC2909

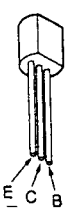

2SD1309

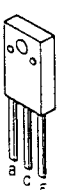

2SC3209LK
2SD774-34

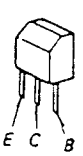

DTZ5.6B
MA110

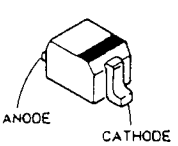

D4SB60L

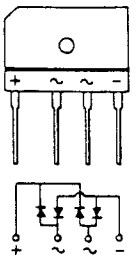

EGP20G
ERA15-01TP1
ERA34-10
ERB91-02
EU-2
GP08D
HSM83
RGP15G
1SS83
10E2

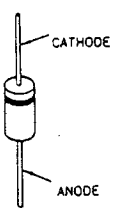

EGP30G
RGP02-17
RGP02-17EL-6433

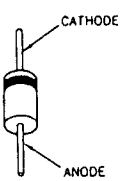

ERC91-02
RGP02-20EL-6394

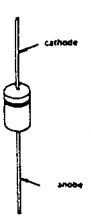

ERD09-15J

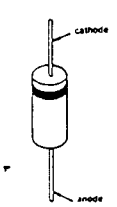

MA153
1SS226

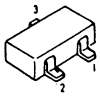

SC015-2

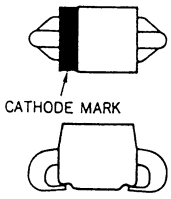

SEL1422G-C, D
SEL1922D-C

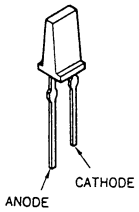

RD13ES-B2
RD16ES-B3
RD18ES-B2
RD2.0ES-B2
RD3.6ES-B2
RD4.7ES-B2
RD5.1ES-B2
RD5.6ES-B2
1SS119

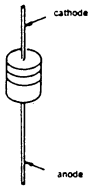

FRU LIST

1)	VIDEO AMP,MCB ASSY (A)	8-934-583-00	
2)	DEFLECTION MCB ASSY (D)	8-934-704-00	
3)	POWER BLOCK (G+F)	8-934-585-00	
4)	CONTROL PANEL ASSY (H)	8-934-705-00	
5)	MICON MCB (N)	8-934-707-00	
6)	CONNECTOR PANEL ASSY (M)	8-934-708-00	
7)	MAIN HARNESS	1-900-076-09	
8)	SUB HARNESS	1-900-048-40	
9)	CABLE ASSY	A-1500-655-A	
10)	FOCUS VR PACK	1-223-417-11	
11)	ITC ASSY (CRT,DY,NA)	8-736-050-90	
		8-736-048-90	(GDM-20E01T)
12)	BEZEL ASSY	X-4031-591-1	
13)	CABINET ASSY	X-4031-590-1	
14)	STAND ASSY	A-1481-666-A	
15)	EMI SHIELD	X-4031-649-1	
16)	PROTECTION BAG	4-368-079-01	
17)	CUSHION UPPER	4-043-390-01	
18)	CUSHION LOWER	4-043-391-01	
19)	CARTON	4-044-296-01	
20)	STAND PAD	4-041-505-01	
21)	JOINT	4-396-077-01	
22)	TRAY	4-038-264-01	

SECTION 6
EXPLODED VIEWS

NOTE:
- Items with no part number and no description are not stocked because they are seldom required for routine service.
- The construction parts of an assembled part are indicated with a collation number in the remark column.
- Items marked " * " are not stocked since they are seldom required for routine service. Some delay should be anticipated when ordering these items.

The components identified by shading and mark ⚠ are critical for safety.
Replace only with part number specified.

Les composants identifies par une trame et une marque ⚠ sont critiques pour la securite.
Ne les remplacer que par une piece portant le numero specifie.

6-1. CHASSIS

□: + − BV TAPPING SCREW (M4 × 8) 7-682-561-04
■: BVTP4 × 16 7-685-663-79
○: + − BV TAPPING SCREW (M4 × 12) 7-682-563-04
△: P2.6 × 8 7-685-134-19

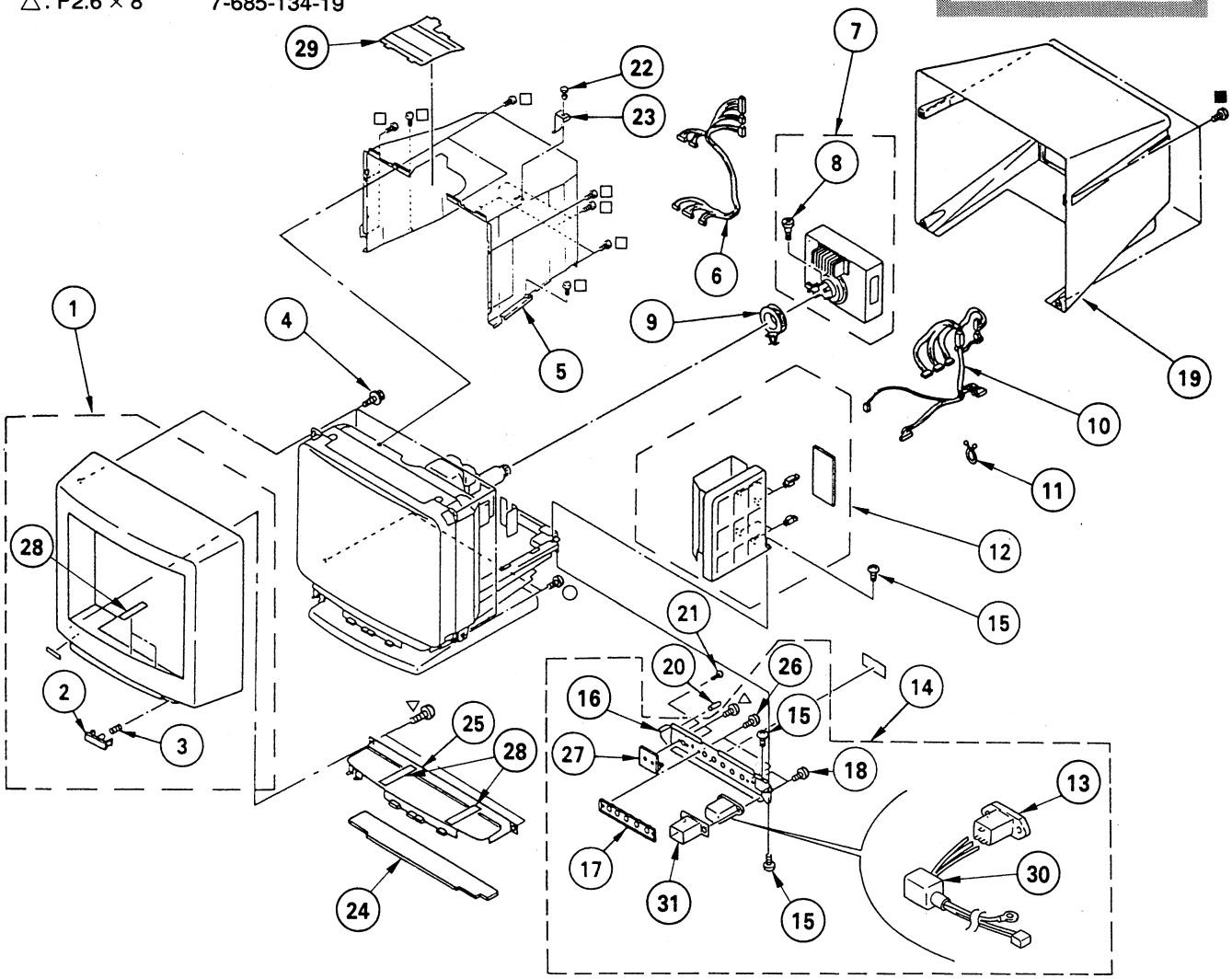

REF.NO.	PART NO.	DESCRIPTION	REMARK
1	X-4031-591-1	BEZEL ASSY	2,3
2	4-042-674-01	BUTTON, POWER	
3	3-571-801-01	SPRING, COMPRESSION	
4	4-365-808-01	SCREW (5), TAPPING	
5	X-4031-649-1	SHIELD ASSY, EMI	
6	1-900-076-09	CONNECTOR ASSY (MAIN HARNESS)	
7	8-934-583-00	VIDEO AMP,MCB ASSY (A BOARD)	
8	4-041-627-01	SCREW (M4X20), HEXAGON HEAD	
9	⚠.1-452-729-11	NECK ASSEMBLY, PICTURE TUBE (NA3011)	
10	1-900-048-40	CONNECTOR ASSY, MICRO 8P (SUB HARNESS)	
11	3-701-417-00	PURSE LOCK (11 DIA.)	
12	⚠.8-934-585-00	POWER BLOCK (G BOARD)	
13	⚠.1-251-141-11	INLET, AC (3P)	
14	8-934-708-00	CONNECTOR PANEL ASSY (M BOARD)	13,15-18,26,27,30,31
15	4-389-025-01	SCREW (M4X8)(EXT TOOTH WASHER)	
16	*4-043-076-01	PANEL (STD), CONNECTOR	
17	1-537-583-11	TERMINAL BOARD ASSY, I/O	
18	4-381-960-31	SCREW (M3X12),TAPPING,(+-)(BV)	
19	X-4031-590-1	CABINET ASSY	
20	4-038-522-01	CAP (VISCA)	
21	4-043-000-01	PLUG	
22	4-374-303-01	RIVET, NYLON	
23	4-043-404-01	HOLDER, G BRACKET	
24	8-934-705-00	CONTROL PANEL ASSY (H BOARD)	
25	X-4031-589-1	BOX ASSY, CONTROL	
26	4-034-937-21	SCREW (M3), TAPPING	
27	8-934-744-00	M BOARD, COMPLETE	
28	*9-911-844-XX	CUSHION (SMALL)	
29	*4-042-119-01	COVER, ANODE CAP	
30	*4-605-946-01	COVER, 3P INLET	
31	*4-044-711-01	HOLDER, INLET	

Les composants identifies par une trame et une marque ⚠ sont critiques pour la securite. Ne les remplacer que par une piece portant le numero specifie.

The components identified by shading and mark ⚠ are critical for safety. Replace only with part number specified.

6-2. PICTURE TUBE

●: + – BV TAPPING SCREW (3 × 12) 7-685-648-79
□: + – BV TAPPING SCREW (M4 × 8) 7-682-561-04
○: + – BV TAPPING SCREW (M4 × 12) 7-682-563-04

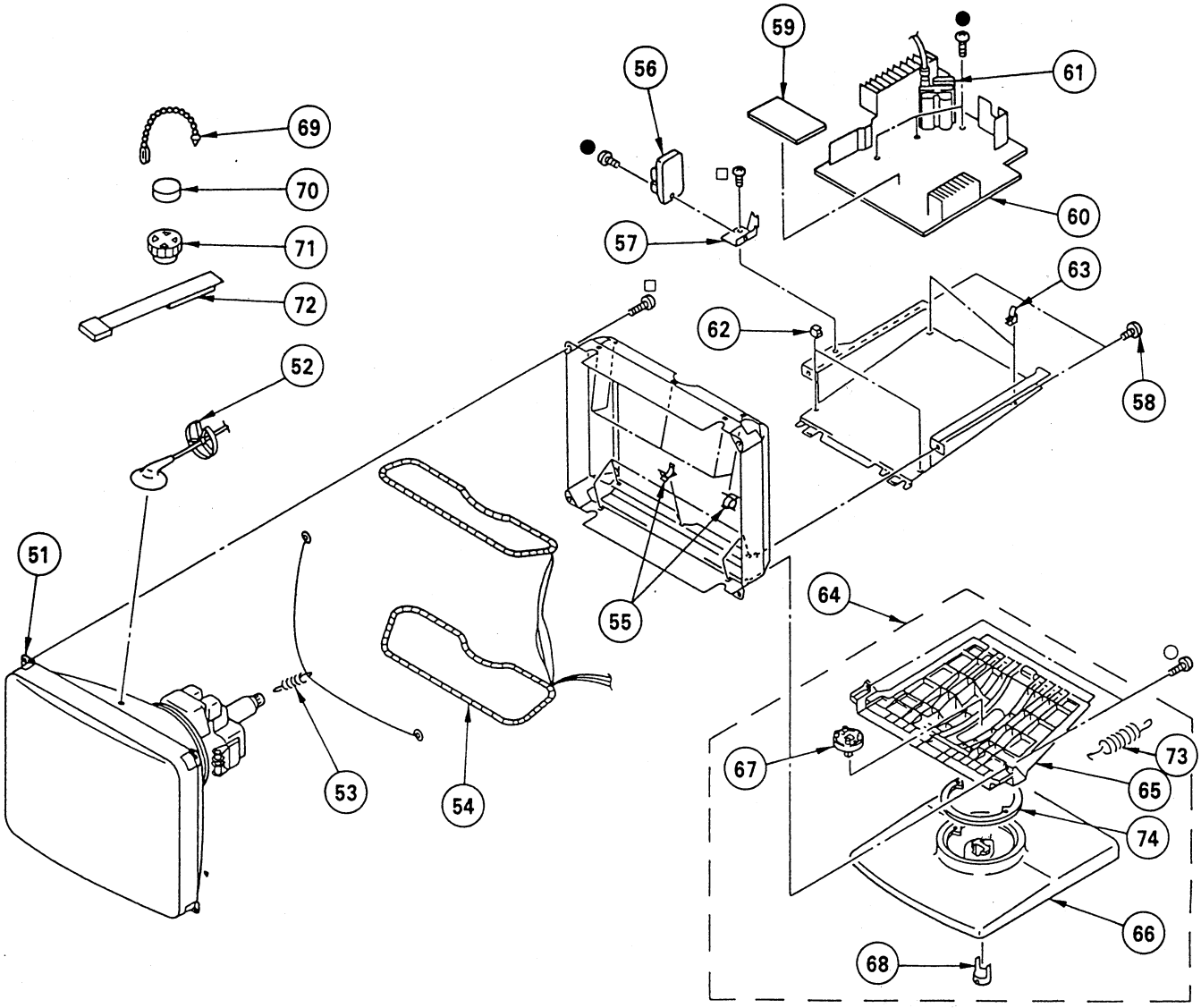

REF.NO.	PART NO.	DESCRIPTION	REMARK
51	⚠.8-736-048-90	ITC ASSY (20SQ8-R1)(CRT,DY,NA) (GDM-20E01T)	
	⚠.8-736-050-90	ITC ASSY (20SQ8-R1)(CRT,DY,NA)	
52	*3-704-372-01	HOLDER, HV CABLE	
53	4-369-318-00	SPRING, TENSION	
54	⚠.1-406-790-31	COIL, DEMAGNETIZATION	
55	*4-395-824-01	HOLDER, DEGAUSSING COIL	
56	⚠.1-223-417-11	RESISTOR ASSY (HIGH-VOLTAGE)	
57	4-042-036-01	BRACKET, FOCUS	
58	4-389-025-01	SCREW (M4X8)(EXT TOOTH WASHER)	
59	8-934-707-00	MICON MCB (N BOARD)	
60	8-934-704-00	DEFLECTION MCB ASSY (D BOARD)	
61	⚠.1-453-162-11	TRANSFORMER ASSY, FLYBACK (NX-2780A1)	
62	*3-701-903-11	HOLDER, PC BOARD	
63	*3-703-141-00	HOLDER, PCB	
64	A-1481-666-A	STAND ASSY	65-68,73,74
65	4-041-636-11	COVER, BOTTOM	
66	X-4031-449-2	BASE ASSY, STAND	
67	4-041-623-01	STOPPER (A)	
68	4-041-621-01	STOPPER (B)	
69	4-308-870-00	CLIP, LEAD WIRE	
70	1-452-032-00	MAGNET, DISK; 10MM ϕ	
71	1-452-094-00	MAGNET, ROTATABLE DISK; 15MM ϕ	
72	X-4030-584-1	PERMALLOY ASSY, CORRECTION	
73	4-042-282-01	SPRING, TENSION	
74	*4-041-625-01	RING, TILT SWIVEL	
75	1-540-006-12	CAP ASSY, HIGH-VOLTAGE	

6-3. KIT

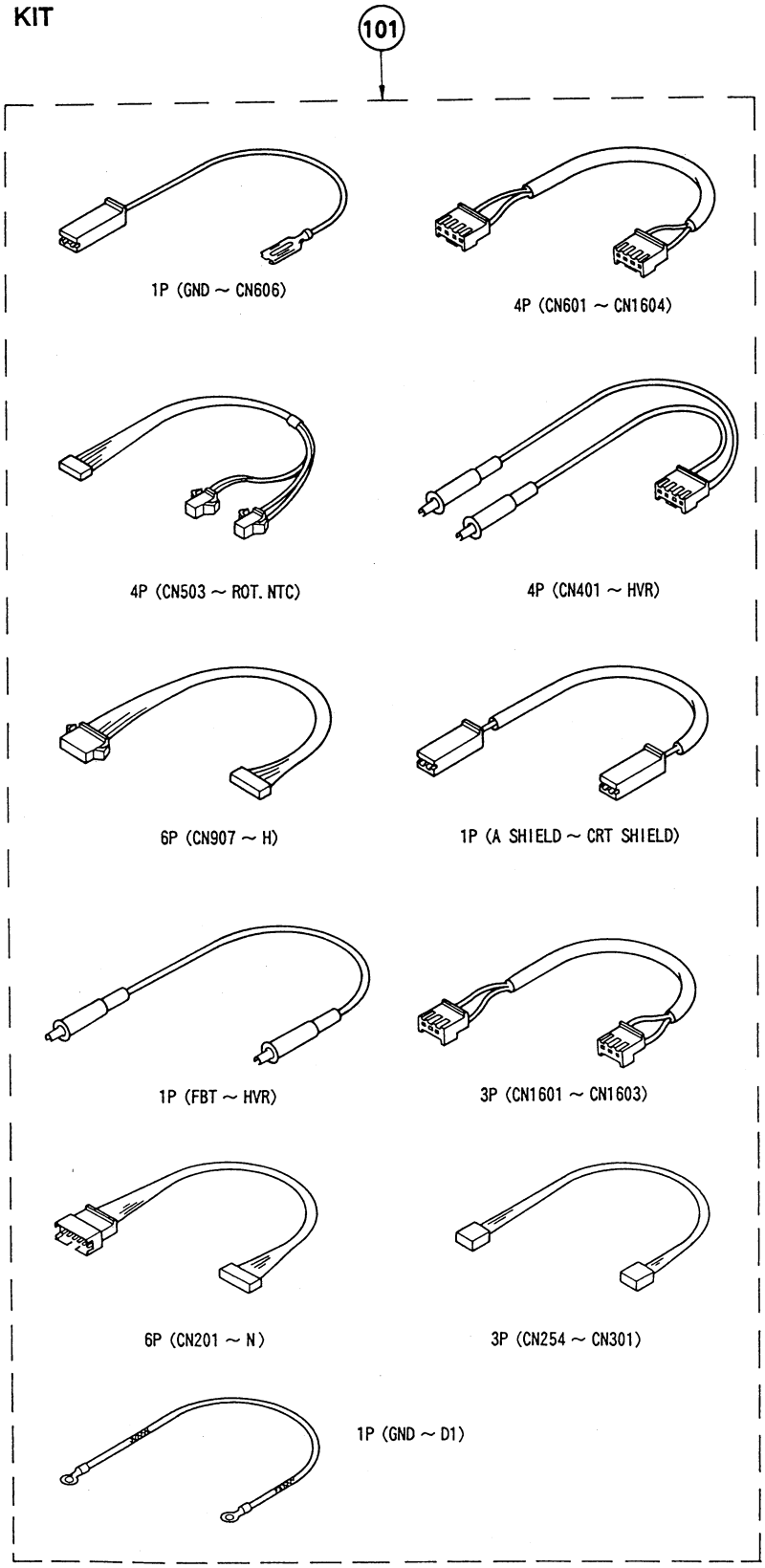

REF.NO.	PART NO.	DESCRIPTION	REMARK
101	A-1500-655-A	CABLE ASSY	

6-4. ACCESSORIES AND PACKING MATERIALS

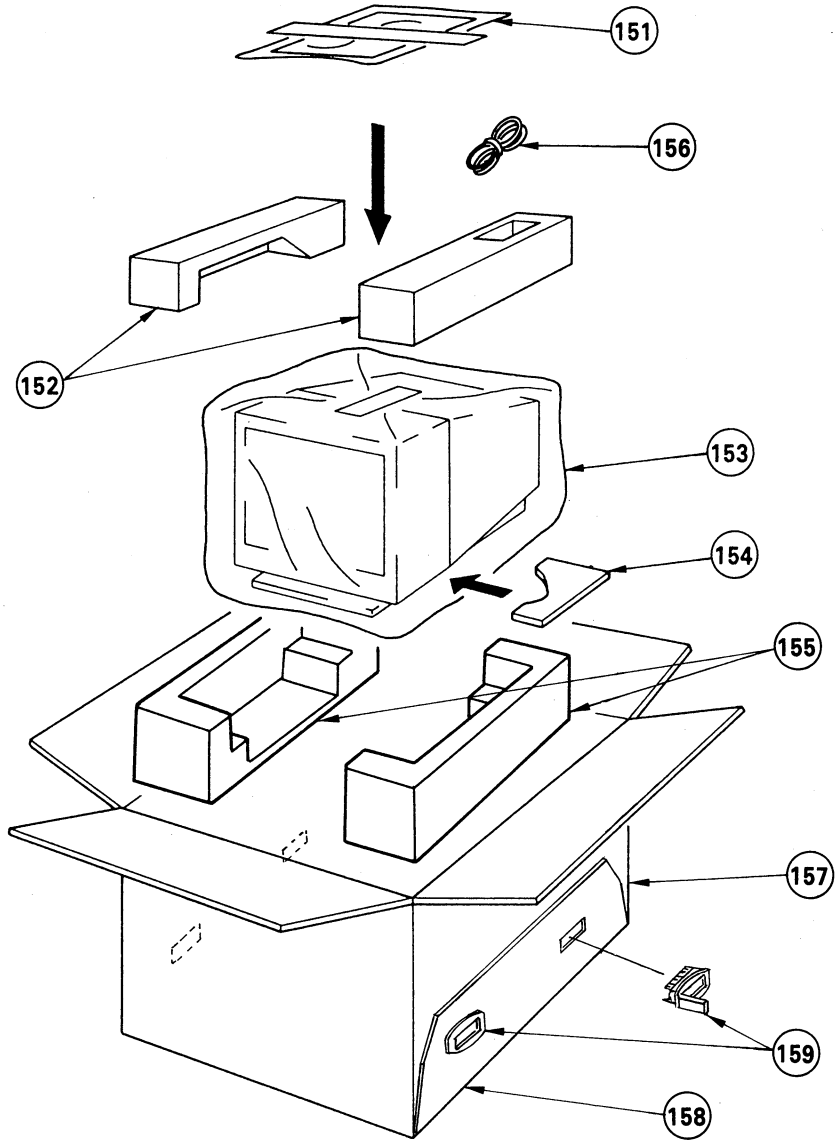

REF.NO.	PART NO.	DESCRIPTION	REMARK
151	*3-758-020-11	MANUAL, INSTRUCTION	
152	*4-043-390-01	CUSHION (UPPER) (ASSY)	
153	4-368-079-01	BAG, PROTECTION	
154	*4-041-505-01	PAD	
155	*4-043-391-01	CUSHION (LOWER) (ASSY)	
156	⚠.1-534-827-14	CORD, POWER (7.0A/125V) (FOR U/C)	
	⚠.1-551-631-22	CORD, POWER (6.0A/250V) (FOR AEP)	
157	*4-043-296-01	INDIVIDUAL CARTON	
	*4-044-926-01	INDIVIDUAL CARTON (GDM-20E01T)	
158	*4-396-077-01	JOINT	
159	*4-038-264-01	TRAY	

The components identified by shading and mark ⚠ are critical for safety.
Replace only with part number specified.

Les composants identifies par une trame et une marque ⚠ sont critiques pour la securite.
Ne les remplacer que par une piece portant le numero specifie.

SECTION 7
ELECTRICAL PARTS LIST

F A

NOTE:

The components identified by shading and mark ⚠ are critical for safety.
Replace only with part number specified.

Les composants identifies par une trame et une marque ⚠ sont critiques pour la securite.
Ne les remplacer que par une piece portant le numero specifie.

- Items marked " * " are not stocked since they are seldom required for routine service. Some delay should be anticipated when ordering these items.
- All variable and adjustable resistors have characteristic curve B, unless otherwise noted.

RESISTORS
- All resistors are in ohms
- F : nonflammable

When indicating parts by reference number, please include the board name.

CAPACITORS
- MF : μF, PF : μμF

COILS
- MMH : mH, UH : μH

REF.NO.	PART NO.	DESCRIPTION				REMARK
		F BOARD, COMPLETE				
		**********				
	1-533-250-11	HOLDER, FUSE				
F1601 ⚠	1-576-233-11	FUSE (H.B.C.) (6.3A/250V)				
	4-043-455-01	COVER, FUSE				
		<CAPACITOR>				
C1601⚠	1-107-533-11	FILM	1MF	20%	250V	
C1605⚠	1-162-578-51	CERAMIC	0.0047MF	20%	400V	
C1606⚠	1-162-578-51	CERAMIC	0.0047MF	20%	400V	
		<CONNECTOR>				
CN1600*	1-580-689-11	PIN, CONNECTOR (PC BOARD) 4P				
CN1601	1-691-960-11	PIN, CONNECTOR (PC BOARD) 3P				
		<RESISTOR>				
R1601⚠	1-202-879-91	SOLID	270K	20%	1/2W	
R1602⚠	1-202-879-91	SOLID	270K	20%	1/2W	
		<VARISTOR>				
⚠VDR160.	1-807-180-31	VARISTOR ZNR-14DK471U				
**********						
	8-934-583-00	VIDEO AMP.MCB (A BOARD)				
		**********				
	4-382-854-01	SCREW (M3X8), P, SW (+)				
		<CAPACITOR>				
C001	1-126-101-11	ELECT	100MF	20%	16V	
C002	1-164-232-11	CERAMIC CHIP	0.01MF	10%	50V	
C003	1-164-232-11	CERAMIC CHIP	0.01MF	10%	50V	
C005	1-164-232-11	CERAMIC CHIP	0.01MF	10%	50V	
C006	1-124-667-11	ELECT	10MF	20%	50V	
C008	1-163-113-00	CERAMIC CHIP	68PF	5%	50V	
C009	1-136-191-11	FILM	0.22MF	10%	250V	
C010	1-162-117-00	CERAMIC	100PF	10%	500V	
C012	1-164-232-11	CERAMIC CHIP	0.01MF	10%	50V	
C013	1-124-634-11	ELECT	1MF	20%	250V	
C014	1-124-798-11	ELECT	1MF	20%	160V	
C015	1-124-667-11	ELECT	10MF	20%	100V	
C016	1-136-189-00	FILM	0.1MF	10%	250V	
C017	1-126-803-11	ELECT	47MF	20%	16V	
C018	1-126-387-11	ELECT	2.2MF	20%	50V	
C019	1-126-387-11	ELECT	2.2MF	20%	50V	
C020	1-126-387-11	ELECT	2.2MF	20%	50V	
C021	1-126-101-11	ELECT	100MF	20%	16V	
C022	1-164-232-11	CERAMIC CHIP	0.01MF	10%	50V	
C025	1-102-157-00	CERAMIC	560PF	10%	500V	
C028	1-163-114-00	CERAMIC CHIP	75PF	5%	50V	
C029	1-136-191-11	FILM	0.22MF	10%	250V	
C030	1-162-117-00	CERAMIC	100PF	10%	500V	
C031	1-124-667-11	ELECT	10MF	20%	100V	
C032	1-164-232-11	CERAMIC CHIP	0.01MF	10%	50V	
C041	1-126-101-11	ELECT	100MF	20%	16V	
C042	1-164-232-11	CERAMIC CHIP	0.01MF	10%	50V	
C048	1-163-113-00	CERAMIC CHIP	68PF	5%	50V	
C049	1-136-191-11	FILM	0.22MF	10%	250V	
C050	1-162-117-00	CERAMIC	100PF	10%	500V	
C060	1-124-667-11	ELECT	10MF	20%	100V	
C061	1-164-232-11	CERAMIC CHIP	0.01MF	10%	50V	
C062	1-164-232-11	CERAMIC CHIP	0.01MF	10%	50V	
C063	1-124-042-51	ELECT	0.47MF	20%	50V	
C067	1-126-803-11	ELECT	47MF	20%	16V	
C070	1-162-318-11	CERAMIC	0.001MF	10%	500V	
C071	1-126-803-11	ELECT	47MF	20%	16V	
C072	1-124-667-11	ELECT	10MF	20%	50V	
C073	1-124-667-11	ELECT	10MF	20%	50V	
C074	1-124-667-11	ELECT	10MF	20%	50V	
C075	1-126-803-11	ELECT	47MF	20%	16V	
C076	1-164-232-11	CERAMIC CHIP	0.01MF	10%	50V	
C077	1-164-182-11	CERAMIC CHIP	0.0033MF	10%	50V	
C078	1-126-803-11	ELECT	47MF	20%	16V	
C079	1-126-163-11	ELECT	4.7MF	20%	50V	
C080	1-126-320-11	ELECT	10MF	20%	16V	
C081	1-124-464-11	ELECT	0.22MF	20%	50V	
C082	1-124-464-11	ELECT	0.22MF	20%	50V	
C083	1-164-004-11	CERAMIC CHIP	0.1MF	10%	25V	
C084	1-124-464-11	ELECT	0.22MF	20%	50V	
C085	1-163-139-00	CERAMIC CHIP	820PF	5%	50V	
C086	1-164-232-11	CERAMIC CHIP	0.01MF	10%	50V	
C087	1-164-232-11	CERAMIC CHIP	0.01MF	10%	50V	
C090	1-164-162-11	CERAMIC CHIP	100PF	5%	100V	
C091	1-164-162-11	CERAMIC CHIP	100PF	5%	100V	
C092	1-164-162-11	CERAMIC CHIP	100PF	5%	100V	
C114	1-164-232-11	CERAMIC CHIP	0.01MF	10%	50V	
C300	1-164-232-11	CERAMIC CHIP	0.01MF	10%	50V	
C301	1-164-232-11	CERAMIC CHIP	0.01MF	10%	50V	
C302	1-164-232-11	CERAMIC CHIP	0.01MF	10%	50V	
C303	1-164-232-11	CERAMIC CHIP	0.01MF	10%	50V	
C304	1-164-232-11	CERAMIC CHIP	0.01MF	10%	50V	
C305	1-164-232-11	CERAMIC CHIP	0.01MF	10%	50V	
C306	1-164-232-11	CERAMIC CHIP	0.01MF	10%	50V	
C307	1-164-232-11	CERAMIC CHIP	0.01MF	10%	50V	
C308	1-126-803-11	ELECT	47MF	20%	16V	
C309	1-164-232-11	CERAMIC CHIP	0.01MF	10%	50V	
C310	1-163-235-11	CERAMIC CHIP	22PF	5%	50V	

Les composants identifies par une trame et une marque ⚠ sont critiques pour la securite. Ne les remplacer que par une piece portant le numero specifie.

The components identified by shading and mark ⚠ are critical for safety. Replace only with part number specified.

A

REF.NO.	PART NO.	DESCRIPTION			REMARK
C311	1-128-475-11	ELECT	10MF	20%	160V
C315	1-124-667-11	ELECT	10MF	20%	100V
C316	1-126-803-11	ELECT	47MF	20%	16V
C318	1-126-803-11	ELECT	47MF	20%	16V
C701	1-162-114-00	CERAMIC	0.0047MF		2KV
C702	1-162-114-00	CERAMIC	0.0047MF		2KV
C703	1-163-133-00	CERAMIC CHIP	470PF	5%	50V
C704	1-162-114-00	CERAMIC	0.0047MF		2KV
C705	1-164-232-11	CERAMIC CHIP	0.01MF	10%	50V
C706	1-164-232-11	CERAMIC CHIP	0.01MF	10%	50V
C707	1-164-232-11	CERAMIC CHIP	0.01MF	10%	50V
C708	1-164-232-11	CERAMIC CHIP	0.01MF	10%	50V
C709	1-164-232-11	CERAMIC CHIP	0.01MF	10%	50V
C710	1-164-232-11	CERAMIC CHIP	0.01MF	10%	50V
C711	1-163-133-00	CERAMIC CHIP	470PF	5%	50V
C712	1-162-114-00	CERAMIC	0.0047MF		2KV
C713	1-162-318-11	CERAMIC	0.001MF	10%	500V
C714	1-162-318-11	CERAMIC	0.001MF	10%	500V
		<CONNECTOR>			
CN301	*1-564-518-11	PLUG, CONNECTOR 3P			
CN302	*1-564-526-11	PLUG, CONNECTOR 11P			
CN303	*1-564-522-11	PLUG, CONNECTOR 7P			
CN304	*1-564-521-11	PLUG, CONNECTOR 6P			
CN701	*1-564-518-11	PLUG, CONNECTOR 3P			
CN702	1-691-756-11	PIN, CONNECTOR (PC BOARD) 2P			
		<DIODE>			
D002	8-719-901-83	DIODE 1SS83			
D003	8-719-901-83	DIODE 1SS83			
D004	8-719-901-83	DIODE 1SS83			
D005	8-719-800-76	DIODE 1SS226			
D006	8-719-800-76	DIODE 1SS226			
D007	8-719-901-83	DIODE 1SS83			
D008	8-719-404-46	DIODE MA110			
D009	8-719-404-46	DIODE MA110			
D022	8-719-901-83	DIODE 1SS83			
D023	8-719-901-83	DIODE 1SS83			
D024	8-719-901-83	DIODE 1SS83			
D027	8-719-901-83	DIODE 1SS83			
D042	8-719-901-83	DIODE 1SS83			
D043	8-719-901-83	DIODE 1SS83			
D044	8-719-901-83	DIODE 1SS83			
D047	8-719-901-83	DIODE 1SS83			
D061	8-719-018-47	DIODE SC015-2			
D062	8-719-901-83	DIODE 1SS83			
D063	8-719-901-83	DIODE 1SS83			
D701	8-719-404-46	DIODE MA110			
D702	8-719-404-46	DIODE MA110			
		<FERRITE BEAD>			
FB001	1-414-235-11	INDUCTOR, FERRITE BEAD			
FB002	1-414-235-11	INDUCTOR, FERRITE BEAD			
FB003	1-414-235-11	INDUCTOR, FERRITE BEAD			
FB004	1-414-235-11	INDUCTOR, FERRITE BEAD			
FB005	1-414-235-11	INDUCTOR, FERRITE BEAD			
FB006	1-414-235-11	INDUCTOR, FERRITE BEAD			
FB007	1-414-235-11	INDUCTOR, FERRITE BEAD			
FB008	1-414-235-11	INDUCTOR, FERRITE BEAD			
FB009	1-414-235-11	INDUCTOR, FERRITE BEAD			
FB701	1-410-397-21	FERRITE BEAD INDUCTOR 1.1UH			
FB702	1-410-397-21	FERRITE BEAD INDUCTOR 1.1UH			
FB703	1-410-397-21	FERRITE BEAD INDUCTOR 1.1UH			
FB704	1-410-397-21	FERRITE BEAD INDUCTOR 1.1UH			
FB705	1-543-298-11	BEAD, FERRITE			
		<FILTER>			
FL004	1-421-928-11	FILTER, NOISE			
FL005	1-421-928-11	FILTER, NOISE			
FL006	1-236-164-11	ENCAPSULATED COMPONENT			
FL007	1-424-464-11	FILTER, NOISE			
FL008	1-424-464-11	FILTER, NOISE			
FL012	1-424-464-11	FILTER, NOISE			
FL013	1-421-928-11	FILTER, NOISE			
FL014	1-421-928-11	FILTER, NOISE			
FL015	1-424-464-11	FILTER, NOISE			
FL016	1-424-464-11	FILTER, NOISE			
FL017	1-421-928-11	FILTER, NOISE			
		<IC>			
IC001	1-467-361-21	AMPLIFIER BLOCK, PRE (PRE-1)			
IC002	8-749-010-06	IC CR5527E			
IC003	8-752-057-43	IC CXA1616S			
IC004	8-759-143-11	IC UPC24M12HF			
IC005	8-759-708-05	IC NJM78L05A			
IC006	8-759-012-70	IC MC7908CT			
IC007	8-759-242-74	IC TC7W04F			
IC008	8-759-060-00	IC BA10324AF			
IC009	8-759-032-01	IC MC74HC00AF			
IC010	8-759-168-72	IC TDA6101Q			
IC011	8-759-168-72	IC TDA6101Q			
IC012	8-759-168-72	IC TDA6101Q			
IC013	8-759-168-72	IC TDA6101Q			
IC701	8-759-996-43	IC RC4558PS			
IC702	8-759-242-74	IC TC7W04F			
		<JACK>			
J001	*1-568-547-11	JACK, MINIATUER PIN			
J021	*1-568-547-11	JACK, MINIATUER PIN			
J041	*1-568-547-11	JACK, MINIATUER PIN			
J701⚠	1-251-116-11	SOCKET, PITURE TUBE			
		<COIL>			
L002	1-412-999-11	INDUCTOR CHIP	47N		
L003	1-410-686-11	INDUCTOR	1MMH		
L022	1-412-999-11	INDUCTOR CHIP	47N		
L042	1-412-999-11	INDUCTOR CHIP	47N		
		<TRANSISTOR>			
Q010	8-729-120-28	TRANSISTOR 2SC1623-L5L6			
Q011	8-729-216-22	TRANSISTOR 2SA1162-G			
Q060	8-729-216-22	TRANSISTOR 2SA1162-G			
Q063	8-729-901-00	TRANSISTOR DTC124EK			
Q701	8-729-020-07	TRANSISTOR 2SC4686A(LBSONY)			
Q702	8-729-020-07	TRANSISTOR 2SC4686A(LBSONY)			
		<RESISTOR>			
R001	1-216-631-11	METAL CHIP	150	0.50%	1/10W
R002	1-216-001-00	METAL GLAZE	10	5%	1/10W

The components identified by shading and mark ⚠ are critical for safety.
Replace only with part number specified.

Les composants identifies par une trame et une marque ⚠ sont critiques pour la securite.
Ne les remplacer que par une piece portant le numero specifie.

A

REF.NO.	PART NO.	DESCRIPTION				REMARK
R003	1-216-631-11	METAL CHIP	150	0.50%	1/10W	
R004	1-216-631-11	METAL CHIP	150	0.50%	1/10W	
R005	1-216-631-11	METAL CHIP	150	0.50%	1/10W	
R009	1-216-017-00	METAL GLAZE	47	5%	1/10W	
R010	1-216-039-00	METAL GLAZE	390	5%	1/10W	
R011	1-220-277-11	METAL GLAZE	2.2K	5%	1/4W	
R012	1-216-105-00	METAL GLAZE	220K	5%	1/10W	
R013	1-216-121-00	METAL GLAZE	1M	5%	1/10W	
R015	1-247-734-11	CARBON	39	5%	1/2W	
R016	1-216-025-00	METAL GLAZE	100	5%	1/10W	
R017	1-216-037-00	METAL GLAZE	330	5%	1/10W	
R020	1-216-033-00	METAL GLAZE	220	5%	1/10W	
R021	1-216-631-11	METAL CHIP	150	0.50%	1/10W	
R022	1-216-033-00	METAL GLAZE	220	5%	1/10W	
R023	1-216-033-00	METAL GLAZE	220	5%	1/10W	
R024	1-216-033-00	METAL GLAZE	220	5%	1/10W	
R025	1-216-057-00	METAL GLAZE	2.2K	5%	1/10W	
R026	1-249-417-11	CARBON	1K	5%	1/4W	F
R029	1-216-017-00	METAL GLAZE	47	5%	1/10W	
R030	1-216-039-00	METAL GLAZE	390	5%	1/10W	
R031	1-220-277-11	METAL GLAZE	2.2K	5%	1/4W	
R032	1-216-105-00	METAL GLAZE	220K	5%	1/10W	
R033	1-216-121-00	METAL GLAZE	1M	5%	1/10W	
R035	1-247-734-11	CARBON	39	5%	1/2W	
R036	1-216-095-00	METAL GLAZE	82K	5%	1/10W	
R037	1-216-095-00	METAL GLAZE	82K	5%	1/10W	
R038	1-216-073-00	METAL GLAZE	10K	5%	1/10W	
R039	1-216-061-00	METAL GLAZE	3.3K	5%	1/10W	
R040	1-216-065-00	METAL GLAZE	4.7K	5%	1/10W	
R041	1-216-631-11	METAL CHIP	150	0.50%	1/10W	
R042	1-216-067-00	METAL GLAZE	5.6K	5%	1/10W	
R043	1-216-053-00	METAL GLAZE	1.5K	5%	1/10W	
R044	1-216-025-00	METAL GLAZE	100	5%	1/10W	
R045	1-216-025-00	METAL GLAZE	100	5%	1/10W	
R046	1-216-121-00	METAL GLAZE	1M	5%	1/10W	
R049	1-216-017-00	METAL GLAZE	47	5%	1/10W	
R050	1-216-039-00	METAL GLAZE	390	5%	1/10W	
R051	1-220-277-11	METAL GLAZE	2.2K	5%	1/4W	
R052	1-216-105-00	METAL GLAZE	220K	5%	1/10W	
R053	1-216-121-00	METAL GLAZE	1M	5%	1/10W	
R055	1-247-734-11	CARBON	39	5%	1/2W	
R056	1-216-121-00	METAL GLAZE	1M	5%	1/10W	
R057	1-216-025-00	METAL GLAZE	100	5%	1/10W	
R058	1-247-734-11	CARBON	39	5%	1/2W	
R063	1-216-033-00	METAL GLAZE	220	5%	1/10W	
R064	1-216-033-00	METAL GLAZE	220	5%	1/10W	
R065	1-216-033-00	METAL GLAZE	220	5%	1/10W	
R066	1-216-033-00	METAL GLAZE	220	5%	1/10W	
R067	1-216-069-00	METAL GLAZE	6.8K	5%	1/10W	
R068	1-216-065-00	METAL GLAZE	4.7K	5%	1/10W	
R069	1-216-069-00	METAL GLAZE	6.8K	5%	1/10W	
R070	1-216-057-00	METAL GLAZE	2.2K	5%	1/10W	
R072	1-216-057-00	METAL GLAZE	2.2K	5%	1/10W	
R075	1-216-057-00	METAL GLAZE	2.2K	5%	1/10W	
R076	1-216-093-00	METAL GLAZE	68K	5%	1/10W	
R077	1-216-091-00	METAL GLAZE	56K	5%	1/10W	
R078	1-216-057-00	METAL GLAZE	2.2K	5%	1/10W	
R079	1-216-113-00	METAL GLAZE	470K	5%	1/10W	
R081	1-216-085-00	METAL GLAZE	33K	5%	1/10W	
R082	1-216-081-00	METAL GLAZE	22K	5%	1/10W	
R083	1-216-073-00	METAL GLAZE	10K	5%	1/10W	
R084	1-216-073-00	METAL GLAZE	10K	5%	1/10W	
R085	1-216-091-00	METAL GLAZE	56K	5%	1/10W	
R086	1-216-091-00	METAL GLAZE	56K	5%	1/10W	
R087	1-216-091-00	METAL GLAZE	56K	5%	1/10W	
R091	1-216-061-00	METAL GLAZE	3.3K	5%	1/10W	
R092	1-216-081-00	METAL GLAZE	22K	5%	1/10W	
R093	1-216-081-00	METAL GLAZE	22K	5%	1/10W	
R094	1-216-061-00	METAL GLAZE	3.3K	5%	1/10W	
R095	1-216-081-00	METAL GLAZE	22K	5%	1/10W	
R096	1-216-081-00	METAL GLAZE	22K	5%	1/10W	
R097	1-216-061-00	METAL GLAZE	3.3K	5%	1/10W	
R098	1-216-081-00	METAL GLAZE	22K	5%	1/10W	
R099	1-216-081-00	METAL GLAZE	22K	5%	1/10W	
R300	1-216-091-00	METAL GLAZE	56K	5%	1/10W	
R301	1-216-091-00	METAL GLAZE	56K	5%	1/10W	
R302	1-216-091-00	METAL GLAZE	56K	5%	1/10W	
R303	1-216-091-00	METAL GLAZE	56K	5%	1/10W	
R304	1-216-091-00	METAL GLAZE	56K	5%	1/10W	
R305	1-216-091-00	METAL GLAZE	56K	5%	1/10W	
R306	1-216-041-00	METAL GLAZE	470	5%	1/10W	
R307	1-216-055-00	METAL GLAZE	1.8K	5%	1/10W	
R308	1-216-065-00	METAL GLAZE	4.7K	5%	1/10W	
R309	1-216-075-00	METAL GLAZE	12K	5%	1/10W	
R310	1-216-065-00	METAL GLAZE	4.7K	5%	1/10W	
R311	1-216-075-00	METAL GLAZE	12K	5%	1/10W	
R312	1-216-065-00	METAL GLAZE	4.7K	5%	1/10W	
R313	1-216-075-00	METAL GLAZE	12K	5%	1/10W	
R314	1-216-059-00	METAL GLAZE	2.7K	5%	1/10W	
R315	1-216-049-00	METAL GLAZE	1K	5%	1/10W	
R316	1-216-059-00	METAL GLAZE	2.7K	5%	1/10W	
R317	1-216-049-00	METAL GLAZE	1K	5%	1/10W	
R318	1-216-059-00	METAL GLAZE	2.7K	5%	1/10W	
R319	1-216-073-00	METAL GLAZE	10K	5%	1/10W	
R320	1-220-329-11	METAL GLAZE	56K	5%	1/2W	
R321	1-216-073-00	METAL GLAZE	10K	5%	1/10W	
R322	1-220-329-11	METAL GLAZE	56K	5%	1/2W	
R324	1-220-329-11	METAL GLAZE	56K	5%	1/2W	
R325	1-216-025-00	METAL GLAZE	100	5%	1/10W	
R326	1-216-025-00	METAL GLAZE	100	5%	1/10W	
R327	1-216-025-00	METAL GLAZE	100	5%	1/10W	
R330	1-216-091-00	METAL GLAZE	56K	5%	1/10W	
R331	1-216-091-00	METAL GLAZE	56K	5%	1/10W	
R332	1-216-091-00	METAL GLAZE	56K	5%	1/10W	
R376	1-216-041-00	METAL GLAZE	470	5%	1/10W	
R377	1-216-113-00	METAL GLAZE	470K	5%	1/10W	
R378	1-216-665-11	METAL CHIP	3.9K	0.50%	1/10W	
R379	1-216-665-11	METAL CHIP	3.9K	0.50%	1/10W	
R380	1-216-665-11	METAL CHIP	3.9K	0.50%	1/10W	
R381	1-216-665-11	METAL CHIP	3.9K	0.50%	1/10W	
R382	1-216-057-00	METAL GLAZE	2.2K	5%	1/10W	
R701	1-216-105-00	METAL GLAZE	220K	5%	1/10W	
R702	1-216-105-00	METAL GLAZE	220K	5%	1/10W	
R703	1-216-105-00	METAL GLAZE	220K	5%	1/10W	
R704	1-216-105-00	METAL GLAZE	220K	5%	1/10W	
R705	1-249-417-11	CARBON	1K	5%	1/4W	F
R706	1-216-097-00	METAL GLAZE	100K	5%	1/10W	
R727	1-216-063-00	METAL GLAZE	3.9K	5%	1/10W	
R728	1-216-049-00	METAL GLAZE	1K	5%	1/10W	
R730	1-216-091-00	METAL GLAZE	56K	5%	1/10W	
R731	1-216-063-00	METAL GLAZE	3.9K	5%	1/10W	
R733	1-216-091-00	METAL GLAZE	56K	5%	1/10W	
R734	1-216-091-00	METAL GLAZE	56K	5%	1/10W	
R735	1-216-049-00	METAL GLAZE	1K	5%	1/10W	
R736	1-216-091-00	METAL GLAZE	56K	5%	1/10W	
R737	1-216-091-00	METAL GLAZE	56K	5%	1/10W	
R738⚠	1-239-748-11	RESISTOR BLOCK (HIGH-VOLTAGE)				

A M G

Les composants identifies par une trame et une marque ⚠ sont critiques pour la securite. Ne les remplacer que par une piece portant le numero specifie.

The components identified by shading and mark ⚠ are critical for safety. Replace only with part number specified.

REF.NO.	PART NO.	DESCRIPTION				REMARK
R739 ⚠	1-239-748-11	RESISTOR BLOCK (HIGH-VOLTAGE)				
		<VARIABLE RESISTOR>				
RV701	1-223-410-11	RES, ADJ, METAL FILM 110M				
		<SPARK GAP>				
SG701	1-519-422-11	GAP, SPARK				
SG702	1-519-504-11	GAP, DISCHARGE				
SG703	1-519-504-11	GAP, DISCHARGE				
SG704	1-519-504-11	GAP, DISCHARGE				
SG705	1-519-504-11	GAP, DISCHARGE				
SG706	1-519-422-11	GAP, SPARK				
SG707	1-519-504-11	GAP, DISCHARGE				
**********						
	8-934-708-00	CONNECTOR PANEL ASSY (M BOARD) **********				
		<CONNECTOR>				
CN250	*1-564-520-11	PLUG, CONNECTOR 5P				
CN251	1-691-803-11	SOCKET, DIN				
CN253	*1-564-518-11	PLUG, CONNECTOR 3P				
CN254	*1-564-518-11	PLUG, CONNECTOR 3P				
		<DIODE>				
D251	8-719-977-49	DIODE DTZ15B				
D252	8-719-800-76	DIODE 1SS226				
D253	8-719-800-76	DIODE 1SS226				
D254	8-719-800-76	DIODE 1SS226				
D255	8-719-977-49	DIODE DTZ15B				
		<RESISTOR>				
R251	1-216-025-00	METAL GLAZE	100	5%	1/10W	
R252	1-216-089-91	METAL GLAZE	47K	5%	1/10W	
R254	1-216-025-00	METAL GLAZE	100	5%	1/10W	
R255	1-216-617-11	METAL CHIP	39	0.50%	1/10W	
R256	1-216-617-11	METAL CHIP	39	0.50%	1/10W	
R257	1-216-617-11	METAL CHIP	39	0.50%	1/10W	
R258	1-216-617-11	METAL CHIP	39	0.50%	1/10W	
		<SWITCH>				
S250	1-572-482-11	SWITCH, KEY BOARD (1 KEY)				
S251	1-570-157-81	SWITCH, SLIDE				
**********						
⚠	8-934-585-00	POWER BLOCK (G BOARD) ********** (INCLUDING F BOARD)				
⚠*	4-374-846-01	COVER, CAPACITOR, CAP TYPE				
⚠	4-382-854-01	SCREW (M3X8), P, SW (+)				
⚠	4-382-854-11	SCREW (M3X10), P, SW (+)				
		<CAPACITOR>				
C601 ⚠	1-162-116-91	CERAMIC	680PF	10%	2KV	
C602 ⚠	1-107-576-11	ELECT	560MF	20%	400V	
C603 ⚠	1-124-794-91	ELECT	4.7MF	20%	100V	
C604 ⚠	1-124-513-91	ELECT	47MF	20%	50V	
C605 ⚠	1-124-045-91	ELECT	4.7MF	20%	50V	
C606 ⚠	1-130-471-91	MYLAR	0.001MF	5%	50V	
C607 ⚠	1-137-194-81	FILM	0.47MF	5%	50V	
C608 ⚠	1-123-605-85	ELECT	100MF	20%	100V	
C609 ⚠	1-125-700-11	ELECT	220MF	20%	200V	
C610 ⚠	1-123-605-85	ELECT	100MF	20%	100V	
C611 ⚠	1-124-785-51	ELECT	3300MF	20%	25V	
C612 ⚠	1-124-785-51	ELECT	3300MF	20%	25V	
C614 ⚠	1-124-127-91	ELECT	100MF	20%	25V	
C615 ⚠	1-124-127-91	ELECT	100MF	20%	25V	
C616 ⚠	1-123-973-91	ELECT	100MF	20%	16V	
C616 ⚠	1-124-127-91	ELECT	100MF	20%	25V	
C617 ⚠	1-124-803-85	ELECT	33MF	20%	160V	
C618 ⚠	1-123-605-85	ELECT	100MF	20%	100V	
C619 ⚠	1-124-035-91	ELECT	47MF	20%	16V	
C620 ⚠	1-130-473-91	MYLAR	0.0015MF	5%	50V	
C621 ⚠	1-162-134-51	CERAMIC	470PF	10%	2KV	
C622 ⚠	1-104-537-91	FILM CHIP	680PF	5%	50V	
C623 ⚠	1-161-953-71	CERAMIC	0.0047MF	20%	400V	
C624 ⚠	1-161-953-71	CERAMIC	0.0047MF	20%	400V	
C625 ⚠	1-123-973-91	ELECT	100MF	20%	16V	
C626 ⚠	1-162-134-51	CERAMIC	470PF	10%	2KV	
C628 ⚠	1-102-228-91	CERAMIC	470PF	10%	500V	
C629 ⚠	1-102-228-91	CERAMIC	470PF	10%	500V	
C630 ⚠	1-102-228-91	CERAMIC	470PF	10%	500V	
C631 ⚠	1-102-228-91	CERAMIC	470PF	10%	500V	
C632 ⚠	1-102-228-91	CERAMIC	470PF	10%	500V	
C633 ⚠	1-102-228-91	CERAMIC	470PF	10%	500V	
C634 ⚠	1-102-228-91	CERAMIC	470PF	10%	500V	
C635 ⚠	1-161-953-71	CERAMIC	0.0047MF	20%	400V	
C636 ⚠	1-161-953-71	CERAMIC	0.0047MF	20%	400V	
C637 ⚠	1-161-953-71	CERAMIC	0.0047MF	20%	400V	
C638 ⚠	1-161-953-71	CERAMIC	0.0047MF	20%	400V	
		<CONNECTOR>				
CN601 ⚠*	1-580-689-11	PIN, CONNECTOR (PC BOARD) 4P				
CN602 ⚠*	1-564-511-51	PLUG, CONNECTOR 8P				
CN603 ⚠*	1-564-508-51	PLUG, CONNECTOR 5P				
CN604 ⚠*	1-564-506-51	PLUG, CONNECTOR 3P				
CN606 ⚠	1-695-915-21	TAB (CONTACT)				
		<DIODE>				
D601 ⚠	8-719-510-53	DIODE D4SB60L				
D602 ⚠	8-719-978-65	DIODE DTZ15B-TT11				
D603 ⚠	8-719-302-05	DIODE EU2				
D604 ⚠	8-719-302-05	DIODE EU2				
D605 ⚠	8-719-302-05	DIODE EU2				
D606 ⚠	8-719-302-05	DIODE EU2				
D607 ⚠	8-719-404-47	DIODE MA110-TX				
D608 ⚠	8-719-045-47	DIODE FML-S16S				
D609 ⚠	8-719-302-05	DIODE EU2				
D610 ⚠	8-719-302-05	DIODE EU2				
D611 ⚠	8-719-302-05	DIODE EU2				
D612 ⚠	8-719-045-48	DIODE FML-G12S				
D613 ⚠	8-719-045-48	DIODE FML-G12S				
D614 ⚠	8-719-979-50	DIODE EGP30D				
D615 ⚠	8-719-978-68	DIODE DTZ16A-TT11				
D616 ⚠	8-719-404-47	DIODE MA110-TX				
D617 ⚠	8-719-977-89	DIODE DTZ2.0B-TT11				
D620 ⚠	8-719-978-84	DIODE DTZ24A-TT11				
D621 ⚠	8-719-404-47	DIODE MA110-TX				
D622 ⚠	8-719-302-05	DIODE EU2				

The components identified by shading and mark ⚠ are critical for safety.
Replace only with part number specified.

Les composants identifies par une trame et une marque ⚠ sont critiques pour la securite.
Ne les remplacer que par une piece portant le numero specifie.

G D

REF.NO.	PART NO.	DESCRIPTION					REMARK
D623	⚠8-719-302-05	DIODE EU2					
D627	⚠8-719-978-65	DIODE DTZ15B-TT11					
D628	⚠8-719-404-47	DIODE MA110-TX					
D629	⚠8-719-977-89	DIODE DTZ2.0B-TT11					
D630	⚠8-719-404-47	DIODE MA110-TX					
D631	⚠8-719-404-47	DIODE MA110-TX					
		<FERRITE BEAD>					
FB601	⚠1-410-397-11	FERRITE BEAD INDUCTOR 1.1UH					
FB602	⚠1-410-397-11	FERRITE BEAD INDUCTOR 1.1UH					
FB603	⚠1-410-396-51	FERRITE BEAD INDUCTOR 0.45UH					
FB604	⚠1-410-396-51	FERRITE BEAD INDUCTOR 0.45UH					
FB605	⚠1-410-396-51	FERRITE BEAD INDUCTOR 0.45UH					
FB606	⚠1-412-911-21	INDUCTOR, FERRITE BEAD					
FB607	⚠1-412-911-21	INDUCTOR, FERRITE BEAD					
		<IC>					
IC601	⚠8-749-924-69	IC STR-M6523					
IC602	⚠8-749-923-50	PHOTO COUPLER PC111YS					
IC603	⚠8-749-921-86	IC SE-140N					
IC604	⚠8-759-164-53	IC NJM7863FD					
		<COIL>					
L601	⚠1-412-533-41	INDUCTOR	47UH				
L602	⚠1-412-533-41	INDUCTOR	47UH				
L605	⚠1-412-533-41	INDUCTOR	47UH				
		<TRANSISTOR>					
Q601	⚠8-729-114-87	TRANSISTOR 2SD1309-L					
Q605	⚠8-729-823-99	TRANSISTOR 2SC2909-AA					
Q606	⚠8-729-901-23	TRANSISTOR DTC143TK-T146					
Q608	⚠8-729-901-23	TRANSISTOR DTC143TK-T146					
Q609	⚠8-729-920-72	TRANSISTOR 2SA1037K-T-146-QR					
Q610	⚠8-729-920-75	TRANSISTOR 2SC2412K-T-146-QR					
Q611	⚠8-729-920-75	TRANSISTOR 2SC2412K-T-146-QR					
		<RESISTOR>					
R601	⚠1-215-926-71	METAL OXIDE	33K	5%	3W		F
R602	⚠1-215-926-71	METAL OXIDE	33K	5%	3W		F
R603	⚠1-220-293-91	METAL GLAZE	47K	5%	1/4W		
R604	⚠1-220-264-91	METAL GLAZE	1K	5%	1/4W		
R605	⚠1-217-237-11	WIREWOUND	0.1	10%	3W		F
R606	⚠1-220-262-91	METAL GLAZE	680	5%	1/4W		
R607	⚠1-220-293-91	METAL GLAZE	47K	5%	1/4W		
R608	⚠1-218-478-91	METAL GLAZE	330	5%	1/4W		
R609	⚠1-220-277-91	METAL GLAZE	2.2K	5%	1/4W		
R610	⚠1-220-285-91	METAL GLAZE	10K	5%	1/4W		
R611	⚠1-220-285-91	METAL GLAZE	10K	5%	1/4W		
R612	⚠1-220-264-91	METAL GLAZE	1K	5%	1/4W		
R613	⚠1-123-606-51	ELECT	1000MF		20%		25V
R618	⚠1-215-880-71	METAL OXIDE	10	5%	2W		F
R619	⚠1-220-313-91	METAL GLAZE	100K	5%	1/4W		
R620	⚠1-215-875-71	METAL OXIDE	10K	5%	1W		F
R621	⚠1-220-258-91	METAL GLAZE	100	5%	1/4W		
R624	⚠1-215-880-71	METAL OXIDE	10	5%	2W		F
R627	⚠1-217-298-11	WIREWOUND	10	10%	5W		F
R628	⚠1-220-260-91	METAL GLAZE	390	5%	1/4W		
R629	⚠1-216-398-71	METAL OXIDE	5.6	5%	3W		F
R630	⚠1-216-654-91	METAL CHIP	1.3K	0.50%	1/10W		
R631	⚠1-218-754-91	METAL CHIP	120K	0.50%	1/10W		
R632	⚠1-220-264-91	METAL GLAZE	1K	5%	1/4W		
R633	⚠1-216-690-91	METAL CHIP	43K	0.50%	1/10W		
R634	⚠1-220-285-91	METAL GLAZE	10K	5%	1/4W		
R635	⚠1-218-754-91	METAL CHIP	120K	0.50%	1/10W		
R636	⚠1-202-881-91	SOLID	470K	20%	1/2W		
R637	⚠1-215-925-71	METAL OXIDE	22K	5%	3W		F
R638	⚠1-260-288-71	CARBON	0.47	5%	1/2W		
R639	⚠1-249-377-91	CARBON	0.47	5%	1/4W		F
R640	⚠1-249-377-91	CARBON	0.47	5%	1/4W		F
R641	⚠1-249-377-91	CARBON	0.47	5%	1/4W		F
R642	⚠1-249-377-91	CARBON	0.47	5%	1/4W		F
R643	⚠1-249-377-91	CARBON	0.47	5%	1/4W		F
R644	⚠1-249-377-91	CARBON	0.47	5%	1/4W		F
R645	⚠1-249-377-91	CARBON	0.47	5%	1/4W		F
R646	⚠1-249-377-91	CARBON	0.47	5%	1/4W		F
R647	⚠1-249-377-91	CARBON	0.47	5%	1/4W		F
R648	⚠1-249-443-51	CARBON	0.47	5%	1/4W		F
R649	⚠1-220-258-91	METAL GLAZE	100	5%	1/4W		
R650	⚠1-220-285-91	METAL GLAZE	10K	5%	1/4W		
R651	⚠1-220-277-91	METAL GLAZE	2.2K	5%	1/4W		
		<RELAY>					
RY601	⚠1-515-986-12	RELAY					
RY602	⚠1-515-796-11	RELAY					
		<TRANSFOMER>					
T601	⚠1-423-889-12	TRANSFORMER, CONVERTER (SRT)					

****

8-934-704-00 DEFLECTION MCB (D BOARD)
****

*4-043-154-01	HOLDER, IC				
*4-374-846-01	COVER, CAPACITOR, CAP TYPE				
*4-381-907-01	INSULATOR (A)				
*4-381-908-01	INSULATOR (B)				
*4-381-995-01	SPRING (E)				
4-382-854-01	SCREW (M3X8), P, SW (+)				
	<CAPACITOR>				
C402	1-102-106-00	CERAMIC	100PF	10%	50V
C403	1-136-153-00	FILM	0.01MF	5%	50V
C407	1-136-165-00	FILM	0.1MF	5%	50V
C408	1-130-475-00	MYLAR	0.0022MF	5%	50V
C410	1-162-134-11	CERAMIC	470PF	10%	2KV
C411	1-136-165-00	FILM	0.1MF	5%	50V
C412	1-101-804-00	CERAMIC	10PF	5%	500V
C413	1-101-804-00	CERAMIC	10PF	5%	500V
C414	1-162-318-11	CERAMIC	0.001MF	10%	500V
C415	1-136-153-00	FILM	0.01MF	5%	50V
C416	1-130-475-00	MYLAR	0.0022MF	5%	50V
C417	1-126-964-11	ELECT	10MF	20%	50V
C418	1-102-112-00	CERAMIC	330PF	10%	50V
C419	1-126-964-11	ELECT	10MF	20%	50V
C423	1-136-165-00	FILM	0.1MF	5%	50V
C425	1-136-173-00	FILM	0.47MF	5%	50V
C427	1-124-557-11	ELECT	1000MF	20%	25V
C428	1-124-557-11	ELECT	1000MF	20%	25V
C430	1-136-157-00	FILM	0.022MF	5%	50V
C431	1-128-226-11	ELECT	220MF	20%	35V

Les composants identifies par une trame et une marque ⚠ sont critiques pour la securite. Ne les remplacer que par une piece portant le numero specifie.

The components identified by shading and mark ⚠ are critical for safety. Replace only with part number specified.

D

REF.NO.	PART NO.	DESCRIPTION			REMARK
C432	1-106-228-00	MYLAR	0.22MF	10%	100V
C433	1-136-165-00	FILM	0.1MF	5%	50V
C434	1-136-153-00	FILM	0.01MF	5%	50V
C435	1-130-479-00	MYLAR	0.0047MF	5%	50V
C438	1-136-165-00	FILM	0.1MF	5%	50V
C439	1-104-709-11	ELECT	4.7MF	0	160V
C440	1-130-483-00	MYLAR	0.01MF	5%	50V
C441	1-106-367-00	MYLAR	0.01MF	10%	200V
C442	1-106-367-00	MYLAR	0.01MF	10%	200V
C443	1-128-475-11	ELECT	10MF		160V
C444	1-126-964-11	ELECT	10MF	20%	50V
C445	1-104-718-91	CERAMIC	33PF	5%	2KV
C448	1-126-943-11	ELECT	2200MF	20%	25V
C450	1-126-964-11	ELECT	10MF	20%	50V
C451	1-126-964-11	ELECT	10MF	20%	50V
C452	1-126-964-11	ELECT	10MF	20%	50V
C453	1-126-964-11	ELECT	10MF	20%	50V
C459	1-126-933-11	ELECT	100MF	20%	16V
C500	1-104-664-11	ELECT	47MF	20%	25V
C501	1-126-804-11	ELECT	100MF	20%	50V
C502	1-126-964-11	ELECT	10MF	20%	50V
C503	1-126-964-11	ELECT	10MF	20%	50V
C504	1-126-941-11	ELECT	470MF	20%	25V
C505	1-126-941-11	ELECT	470MF	20%	25V
C506	1-130-471-00	MYLAR	0.001MF	5%	50V
C507	1-126-941-11	ELECT	470MF	20%	25V
C508	1-124-126-00	ELECT	47MF	20%	16V
C509	1-124-903-11	ELECT	1MF	20%	50V
C510	1-136-159-00	FILM	0.033MF	5%	50V
C511	1-102-110-00	CERAMIC	220PF	10%	50V
C512	1-130-477-00	MYLAR	0.0033MF	5%	50V
C513	1-136-153-00	FILM	0.01MF	5%	50V
C514	1-136-171-00	FILM	0.33MF	5%	50V
C515	1-136-165-00	FILM	0.1MF	5%	50V
C516	1-124-126-00	ELECT	47MF	20%	16V
C518	1-130-473-00	MYLAR	0.0015MF	5%	50V
C519	1-136-165-00	FILM	0.1MF	5%	50V
C520	1-130-479-00	MYLAR	0.0047MF	5%	50V
C521	1-124-903-11	ELECT	1MF	20%	50V
C522	1-162-116-00	CERAMIC	680PF	10%	2KV
C523	1-126-964-11	ELECT	10MF	20%	50V
C524	1-136-165-00	FILM	0.1MF	5%	50V
C525	1-130-471-51	MYLAR	0.001MF	5%	50V
C526	1-130-479-00	MYLAR	0.0047MF	5%	50V
C528	1-130-471-00	MYLAR	0.001MF	5%	50V
C529	1-162-318-11	CERAMIC	0.001MF	10%	500V
C530	1-162-318-11	CERAMIC	0.001MF	10%	500V
C533	1-162-558-11	CERAMIC	100PF	10%	2KV
C534	1-136-173-00	FILM	0.47MF	5%	50V
C535	1-136-157-00	FILM	0.022MF	5%	50V
C536	1-106-351-00	MYLAR	0.0022MF	10%	100V
C537	1-126-941-11	ELECT	470MF	20%	25V
C538	1-107-433-11	FILM	0.006MF	3%	2KV
C539	1-162-558-11	CERAMIC	100PF	10%	2KV
C540	1-136-553-11	FILM	0.0015MF	5%	630V
C541	1-162-114-00	CERAMIC	0.0047MF		2KV
C542	1-128-578-11	ELECT	1MF	20%	100V
C546	1-106-367-00	MYLAR	0.01MF	10%	200V
C547	1-106-367-00	MYLAR	0.01MF	10%	200V
C548	1-104-796-11	ELECT	220MF	20%	63V
C550	1-128-578-11	ELECT	1MF	20%	100V
C551	1-124-557-11	ELECT	1000MF	20%	25V
C552	1-124-557-11	ELECT	1000MF	20%	25V
C553	1-107-846-11	CAP, METALIZED PP FILM	0.10MF		
C554	1-107-505-11	FILM	0.39MF	5%	400V
C555	1-107-803-11	FILM	0.18MF	5%	400V
C556	0-551-819-00	CAP, METALIZED PP FILM	0.36MF		
C557	0-551-820-00	CAP, METALIZED PP FILM	0.72MF		
C558	0-551-821-00	CAP, METALIZED PP FILM	1.50MF		
C559	1-136-173-00	FILM	0.47MF	5%	50V
C561	1-123-024-21	ELECT	33MF		160V
C565	1-136-165-00	FILM	0.1MF	5%	50V
C573	1-162-117-00	CERAMIC	100PF	10%	500V
C800	1-106-359-00	MYLAR	0.0047MF	10%	200V
C801	1-102-114-00	CERAMIC	470PF	10%	50V
C802	1-130-471-00	MYLAR	0.001MF	5%	50V
C803	1-136-105-00	FILM	0.33MF	5%	200V
C804	1-130-477-00	FILM	0.0033MF	5%	50V
C805	1-136-538-11	FILM	0.001MF	3%	2KV
C806	1-123-024-21	ELECT	33MF		160V
C807	1-136-165-00	FILM	0.1MF	5%	50V
C808	1-136-165-00	FILM	0.1MF	5%	50V
C809	1-106-363-00	MYLAR	0.0068MF		200V
C810	1-102-106-00	CERAMIC	100PF	10%	50V
C811	1-102-114-00	CERAMIC	470PF	10%	50V
C812	1-104-665-11	ELECT	100MF	20%	25V
C813	1-136-165-00	FILM	0.1MF	5%	50V
C814	1-124-903-11	ELECT	1MF	20%	50V
C815	1-106-391-12	MYLAR	0.1MF	10%	200V
C816	1-136-165-00	FILM	0.1MF	5%	50V
C817	1-136-165-00	FILM	0.1MF	5%	50V
C818	1-126-967-11	ELECT	47MF	20%	50V
C819	1-126-964-11	ELECT	10MF	20%	50V
C820	1-136-165-00	FILM	0.1MF	5%	50V
C821	1-101-003-00	CERAMIC	0.0047MF		50V
C822	1-102-228-00	CERAMIC	470PF	10%	500V
C823	1-126-964-11	ELECT	10MF	20%	50V
C824	1-126-967-11	ELECT	47MF	20%	50V
C825	1-126-964-11	ELECT	10MF	20%	50V
C826	1-124-903-11	ELECT	1MF	20%	50V
C827	1-102-106-00	CERAMIC	100PF	10%	50V
C828	1-124-903-11	ELECT	1MF	20%	50V
C829	1-126-964-11	ELECT	10MF	20%	50V
C830	1-136-165-00	FILM	0.1MF	5%	50V
C841	1-136-165-00	FILM	0.1MF	5%	50V
C1501	1-130-483-00	MYLAR	0.01MF	5%	50V
C1502	1-130-483-00	MYLAR	0.01MF	5%	50V
C1503	1-130-483-00	MYLAR	0.01MF	5%	50V
C1504	1-130-483-00	MYLAR	0.01MF	5%	50V
C1505	1-130-483-00	MYLAR	0.01MF	5%	50V
C1602⚠	1-137-241-11	FILM	0.47MF	20%	250V
C1641	1-136-165-00	FILM	0.1MF	5%	50V
C1647	1-136-165-00	FILM	0.1MF	5%	50V

<CONNECTOR>

CN400	*1-573-986-11	PIN, CONNECTOR (PC BOARD) 5P
CN401	*1-580-689-11	PIN, CONNECTOR (PC BOARD) 4P
CN500	*1-564-511-11	PLUG, CONNECTOR 8P
CN501	*1-568-536-11	PLUG (MINIATURE DY) 6P
CN502	1-764-101-11	PIN, CONNECTOR (PC BOARD) 2P
CN503	*1-564-507-11	PLUG, CONNECTOR 4P
CN504	*1-564-508-11	PLUG, CONNECTOR 5P
CN505	*1-564-509-11	PLUG, CONNECTOR 6P
CN801	*1-564-512-11	PLUG, CONNECTOR 9P
CN802	*1-764-042-11	PIN, CONNECTOR (STAKING) 20P
CN803	*1-764-042-11	PIN, CONNECTOR (STAKING) 20P

D

REF.NO.	PART NO.	DESCRIPTION	REMARK
CN1603	1-691-960-11	PIN, CONNECTOR (PC BOARD) 3P	
CN1604*	1-580-689-11	PIN, CONNECTOR (PC BOARD) 4P	
		<DIODE>	
D404	8-719-911-19	DIODE 1SS119	
D405	8-719-911-19	DIODE 1SS119	
D406	8-719-911-19	DIODE 1SS119	
D407	8-719-028-72	DIODE RGP02-17EL-6433	
D408	8-719-979-85	DIODE EGP20G	
D409	8-719-110-36	DIODE RD13ESB2	
D410	8-719-908-03	DIODE GP08D	
D411	8-719-028-72	DIODE RGP02-17EL-6433	
D412	8-719-908-03	DIODE GP08D	
D413	8-719-911-19	DIODE 1SS119	
D414	8-719-908-03	DIODE GP08D	
D415	8-719-911-19	DIODE 1SS119	
D416	8-719-110-49	DIODE RD18ESB2	
D417	8-719-911-19	DIODE 1SS119	
D418	8-719-911-19	DIODE 1SS119	
D419	8-719-110-46	DIODE RD16ESB3	
D420	8-719-911-19	DIODE 1SS119	
D421	8-719-911-19	DIODE 1SS119	
D422	8-719-109-81	DIODE RD4.7ESB2	
D425	8-719-920-34	DIODE ERA15-01TP1	
D501	8-719-109-89	DIODE RD5.6ESB2	
D502	8-719-951-30	DIODE ERA91-02	
D503	8-719-920-67	DIODE ERC91-02	
D504	8-719-110-36	DIODE RD13ESB2	
D505	8-719-979-57	DIODE EGP30G	
D506	8-719-920-67	DIODE ERC91-02	
D507	8-719-979-85	DIODE EGP20G	
D508	8-719-979-85	DIODE EGP20G	
D509	8-719-109-69	DIODE RD3.6ESB2	
D510	8-719-984-73	DIODE SB560	
D511	8-719-045-42	DIODE DD52RC	
D512	8-719-911-19	DIODE 1SS119	
D513	8-719-911-19	DIODE 1SS119	
D514	8-719-018-82	DIODE RGP02-20EL-6394	
D515	8-719-911-19	DIODE 1SS119	
D516	8-719-979-57	DIODE EGP30G	
D517	8-719-911-19	DIODE 1SS119	
D518	8-719-911-19	DIODE 1SS119	
D519	8-719-911-19	DIODE 1SS119	
D520	8-719-911-19	DIODE 1SS119	
D521	8-719-911-19	DIODE 1SS119	
D522	8-719-911-19	DIODE 1SS119	
D523	8-719-911-19	DIODE 1SS119	
D524	8-719-908-03	DIODE GP08D	
D525	8-719-920-67	DIODE ERC91-02	
D801	8-719-110-46	DIODE RD16ESB3	
D802	8-719-911-19	DIODE 1SS119	
D803	8-719-911-19	DIODE 1SS119	
D805	8-719-911-19	DIODE 1SS119	
D806	8-719-110-46	DIODE RD16ESB3	
D807	8-719-941-74	DIODE ERB91-02	
D808	8-719-920-67	DIODE ERC91-02	
D809	8-719-911-19	DIODE 1SS119	
D810	8-719-911-19	DIODE 1SS119	
D811	8-719-110-46	DIODE RD16ESB3	
D814	8-719-911-19	DIODE 1SS119	
D815	8-719-109-89	DIODE RD5.6ESB2	
D816	8-719-911-19	DIODE 1SS119	
D817	8-719-109-85	DIODE RD5.1ESB2	
D819	8-719-911-19	DIODE 1SS119	
D820	8-719-911-19	DIODE 1SS119	
D821	8-719-911-19	DIODE 1SS119	
D823	8-719-109-89	DIODE RD5.6ESB2	
D824	8-719-911-19	DIODE 1SS119	
D825	8-719-200-02	DIODE 10E-2	
D826	8-719-109-51	DIODE RD2.0ESB2	
D827	8-719-109-89	DIODE RD5.6ESB2	
D828	8-719-911-19	DIODE 1SS119	
D829	8-719-911-19	DIODE 1SS119	
D1501	8-719-109-81	DIODE RD4.7ESB2	
D1502	8-719-109-81	DIODE RD4.7ESB2	
D1503	8-719-109-81	DIODE RD4.7ESB2	
D1504	8-719-109-81	DIODE RD4.7ESB2	
D1505	8-719-109-81	DIODE RD4.7ESB2	
D1624	8-719-911-19	DIODE 1SS119	
D1629	8-719-911-19	DIODE 1SS119	
		<FERRITE BEAD>	
FB401	1-410-396-41	FERRITE BEAD INDUCTOR 0.45UH	
FB501	1-410-397-21	FERRITE BEAD INDUCTOR 1.1UH	
FB502	1-410-397-21	FERRITE BEAD INDUCTOR 1.1UH	
FB503	1-410-397-21	FERRITE BEAD INDUCTOR 1.1UH	
		<IC>	
IC401	8-759-822-38	IC LA6510	
IC404	8-759-503-91	IC TL082ACP	
IC406	8-759-908-15	IC TL431CLP	
IC407	8-759-980-58	IC TDA8172	
IC408	8-759-013-06	IC MC7805CT	
IC409	8-759-143-11	IC UPC24M12HF	
IC410	8-759-012-71	IC MC7912CT	
IC500	8-759-143-11	IC UPC24M12HF	
IC501	8-759-012-71	IC MC7912CT	
IC502	8-759-503-91	IC TL082ACP	
IC503	8-759-177-43	IC CXA1544P	
IC505	8-759-803-42	IC LA6500-FA	
IC506	8-729-021-70	TRANSISTOR IRHT5305	
IC801	8-759-240-49	IC TC4049BP	
IC802	8-759-182-61	IC DLAB43A	
IC803	8-759-135-80	IC UPC358C	
IC804	1-810-321-12	PROTECTOR MODULE, HV	
IC806	8-759-981-64	IC LM2903DQ	
		<JUMPER>	
JW129	1-412-537-31	INDUCTOR 100UH	
		<COIL>	
L451	1-408-406-00	INDUCTOR 5.6UH	
L501	1-409-597-11	COIL, HORIZONTAL LINEARITY	
L502	1-424-321-11	COIL, CHOKE 1000UH	
L503	1-406-892-11	COIL, CHOKE 4MMH	
L504	1-412-537-31	INDUCTOR 100UH	
L505	1-412-537-31	INDUCTOR 100UH	
L506	1-412-537-31	INDUCTOR 100UH	
L507	1-409-598-11	COIL, HORIZONTAL LINEARITY	
L508	1-406-675-11	COIL, CHOKE 4.7MMH	
L509	1-412-537-31	INDUCTOR 100UH	
L801	1-412-537-31	INDUCTOR 100UH	

Les composants identifies par une trame et une marque ⚠ sont critiques pour la securite. Ne les remplacer que par une piece portant le numero specifie.

The components identified by shading and mark ⚠ are critical for safety. Replace only with part number specified.

D

REF.NO.	PART NO.	DESCRIPTION				REMARK
L803	1-412-527-11	INDUCTOR	15UH			
		<IC LINK>				
PS500⚠	1-532-841-21	LINK, IC 1.6A				
PS501⚠	1-532-984-91	LINK, IC 2.0A				
PS502⚠	1-532-984-91	LINK, IC 2.0A				
PS503⚠	1-532-637-91	LINK, IC 1.0A				
PS504⚠	1-532-637-91	LINK, IC 1.0A				
PS800⚠	1-532-839-21	LINK, IC 1.0A				
		<TRANSISTOR>				
Q402	8-729-119-78	TRANSISTOR 2SC2785-HFE				
Q403	8-729-119-78	TRANSISTOR 2SC2785-HFE				
Q404	8-729-119-76	TRANSISTOR 2SA1175-HFE				
Q406	8-729-140-96	TRANSISTOR 2SD774-34				
Q408	8-729-020-07	TRANSISTOR 2SC4686A(LBSONY)				
Q409	8-729-119-78	TRANSISTOR 2SC2785-HFE				
Q410	8-729-017-69	TRANSISTOR IRFI9620				
Q411	8-729-022-28	TRANSISTOR IRFI620				
Q412	8-729-020-07	TRANSISTOR 2SC4686A(LBSONY)				
Q506	8-729-119-78	TRANSISTOR 2SC2785-HFE				
Q511	8-729-023-09	TRANSISTOR IRFI9630S-LF				
Q512	8-729-023-08	TRANSISTOR 2SC3997-CC				
Q513	8-729-119-78	TRANSISTOR 2SC2785-HFE				
Q514	8-729-119-76	TRANSISTOR 2SA1175-HFE				
Q515	8-729-820-73	TRANSISTOR 2SC3746				
Q517	8-729-140-96	TRANSISTOR 2SD774-34				
Q518	8-729-119-78	TRANSISTOR 2SC2785-HFE				
Q519	8-729-119-78	TRANSISTOR 2SC2785-HFE				
Q522	8-729-119-76	TRANSISTOR 2SA1175-HFE				
Q801	8-729-119-78	TRANSISTOR 2SC2785-HFE				
Q802	8-729-119-76	TRANSISTOR 2SA1175-HFE				
Q803	8-729-022-47	TRANSISTOR 2SK2077(LBSONY)				
Q804	8-729-023-09	TRANSISTOR IRFI9630S-LF				
Q805	8-729-119-78	TRANSISTOR 2SC2785-HFE				
Q806	8-729-119-78	TRANSISTOR 2SC2785-HFE				
Q807	8-729-119-78	TRANSISTOR 2SC2785-HFE				
Q809	8-729-119-76	TRANSISTOR 2SA1175-HFE				
Q810	8-729-119-76	TRANSISTOR 2SA1175-HFE				
Q811	8-729-119-78	TRANSISTOR 2SC2785-HFE				
Q812	8-729-022-18	TRANSISTOR IRLI520				
Q1501	8-729-022-18	TRANSISTOR IRLI520				
Q1603	8-729-119-78	TRANSISTOR 2SC2785-HFE				
Q1606	8-729-119-78	TRANSISTOR 2SC2785-HFE				
Q1607	8-729-119-78	TRANSISTOR 2SC2785-HFE				
		<RESISTOR>				
R404	1-249-393-11	CARBON	10	5%	1/4W	F
R405	1-249-429-11	CARBON	10K	5%	1/4W	
R407	1-249-425-11	CARBON	4.7K	5%	1/4W	
R410	1-249-429-11	CARBON	10K	5%	1/4W	
R411	1-249-431-11	CARBON	15K	5%	1/4W	
R412	1-249-438-11	CARBON	56K	5%	1/4W	
R413	1-247-903-00	CARBON	1M	5%	1/4W	
R414	1-249-437-11	CARBON	47K	5%	1/4W	
R416	1-202-844-00	SOLID	330K	20%	1/2W	
R417	1-202-844-00	SOLID	330K	20%	1/2W	
R418	1-202-844-00	SOLID	330K	20%	1/2W	
R419	1-247-807-31	CARBON	100	5%	1/4W	
R420	1-249-417-11	CARBON	1K	5%	1/4W	
R421	1-249-429-11	CARBON	10K	5%	1/4W	
R422	1-249-435-11	CARBON	33K	5%	1/4W	
R424	1-259-880-11	CARBON	2.2M	5%	1/4W	
R425	1-259-880-11	CARBON	2.2M	5%	1/4W	
R426	1-259-880-11	CARBON	2.2M	5%	1/4W	
R427	1-249-437-11	CARBON	47K	5%	1/4W	
R430	1-249-385-11	CARBON	2.2	5%	1/4W	
R431	1-249-385-11	CARBON	2.2	5%	1/4W	
R433	1-215-909-11	METAL OXIDE	47	5%	3W	F
R434	1-249-425-11	CARBON	4.7K	5%	1/4W	
R436	1-249-383-11	CARBON	1.5	5%	1/4W	F
R438	1-249-425-11	CARBON	4.7K	5%	1/4W	
R439	1-249-417-11	CARBON	1K	5%	1/4W	
R440	1-215-465-00	METAL	68K	1%	1/4W	
R442	1-215-445-00	METAL	10K	1%	1/4W	
R443	1-247-887-00	CARBON	220K	5%	1/4W	
R444	1-216-452-11	METAL OXIDE	180	5%	2W	F
R445	1-249-431-11	CARBON	15K	5%	1/4W	
R446	1-215-445-00	METAL	10K	1%	1/4W	
R447	1-249-417-11	CARBON	1K	5%	1/4W	
R449	1-215-461-00	METAL	47K	1%	1/4W	
R450	1-215-445-00	METAL	10K	1%	1/4W	
R451	1-249-383-11	CARBON	1.5	5%	1/4W	F
R452	1-249-421-11	CARBON	2.2K	5%	1/4W	
R453	1-215-910-00	METAL OXIDE	68	5%	3W	F
R454	1-215-461-00	METAL	47K	1%	1/4W	
R455	1-215-415-00	METAL	560	1%	1/4W	
R458	1-215-467-00	METAL	82K	1%	1/4W	
R459	1-215-439-00	METAL	5.6K	1%	1/4W	
R460	1-215-422-00	METAL	1.1K	1%	1/4W	
R461	1-215-869-11	METAL OXIDE	1K	5%	1W	F
R462	1-214-798-21	METAL	1.8	1%	1/2W	
R463	1-249-383-11	CARBON	1.5	5%	1/4W	F
R464	1-216-393-00	METAL OXIDE	2.2	5%	3W	F
R465	1-216-393-00	METAL OXIDE	2.2	5%	3W	F
R466	1-249-429-11	CARBON	10K	5%	1/4W	
R467	1-249-421-11	CARBON	2.2K	5%	1/4W	
R468	1-249-429-11	CARBON	10K	5%	1/4W	
R469	1-249-441-11	CARBON	100K	5%	1/4W	
R470	1-249-417-11	CARBON	1K	5%	1/4W	F
R471	1-249-409-11	CARBON	220	5%	1/4W	
R472	1-249-409-11	CARBON	220	5%	1/4W	
R479	1-249-425-11	CARBON	4.7K	5%	1/4W	
R481	1-249-413-11	CARBON	470	5%	1/4W	F
R482	1-249-423-11	CARBON	3.3K	5%	1/4W	
R483	1-249-421-11	CARBON	2.2K	5%	1/4W	
R484	1-214-798-21	METAL	1.8	1%	1/2W	
R502	1-249-417-11	CARBON	1K	5%	1/4W	
R503	1-249-429-11	CARBON	10K	5%	1/4W	
R504	1-249-429-11	CARBON	10K	5%	1/4W	
R505	1-249-405-11	CARBON	100	5%	1/4W	F
R506	1-215-455-00	METAL	27K	1%	1/4W	
R507	1-260-288-11	CARBON	0.47	5%	1/2W	
R508	1-260-288-11	CARBON	0.47	5%	1/2W	
R509	1-216-393-00	METAL OXIDE	2.2	5%	3W	F
R510	1-215-445-00	METAL	10K	1%	1/4W	
R511	1-215-883-11	METAL OXIDE	33	5%	2W	F
R512	1-215-861-00	METAL OXIDE	47	5%	1W	F
R513	1-216-393-00	METAL OXIDE	2.2	5%	3W	F
R514	1-216-447-00	METAL OXIDE	27	5%	2W	F
R515	1-208-964-11	METAL OXIDE	4.7	10%	5W	F
R516	1-208-964-11	METAL OXIDE	4.7	10%	5W	F
R517	1-249-429-11	CARBON	10K	5%	1/4W	
R518	1-215-860-11	METAL OXIDE	33	5%	1W	F

The components identified by shading and mark ⚠ are critical for safety.
Replace only with part number specified.

Les composants identifies par une trame et une marque ⚠ sont critiques pour la securite.
Ne les remplacer que par une piece portant le numero specifie.

D

REF.NO.	PART NO.	DESCRIPTION				REMARK
R519	1-249-434-11	CARBON	27K	5%	1/4W	
R520	1-260-296-11	CARBON	2.2	5%	1/2W	
R521	1-249-437-11	CARBON	47K	5%	1/4W	
R522	1-249-429-11	CARBON	10K	5%	1/4W	
R523	1-249-425-11	CARBON	4.7K	5%	1/4W	
R524	1-249-433-11	CARBON	22K	5%	1/4W	
R525	1-249-426-11	CARBON	5.6K	5%	1/4W	
R526	1-215-859-00	METAL OXIDE	22	5%	1W	F
R527	1-249-397-11	CARBON	22	5%	1/4W	F
R529	1-215-455-00	METAL	27K	1%	1/4W	
R530	1-215-453-00	METAL	22K	1%	1/4W	
R531	1-249-423-11	CARBON	3.3K	5%	1/4W	
R532	1-215-445-00	METAL	10K	1%	1/4W	
R533	1-215-445-00	METAL	10K	1%	1/4W	
R534	1-215-452-00	METAL	20K	1%	1/4W	
R535	1-215-452-00	METAL	20K	1%	1/4W	
R536	1-249-417-11	CARBON	1K	5%	1/4W	
R539	1-249-417-11	CARBON	1K	5%	1/4W	
R540	1-247-895-00	CARBON	470K	5%	1/4W	
R541	1-249-429-11	CARBON	10K	5%	1/4W	
R575	1-215-453-00	METAL	22K	1%	1/4W	
R576	1-215-439-00	METAL	5.6K	1%	1/4W	
R578	1-215-891-11	METAL OXIDE	680	5%	2W	F
R581	1-249-414-11	CARBON	560	5%	1/4W	
R582	1-249-429-11	CARBON	10K	5%	1/4W	
R583	1-249-414-11	CARBON	560	5%	1/4W	F
R584	1-249-415-11	CARBON	680	5%	1/4W	
R585	1-249-421-11	CARBON	2.2K	5%	1/4W	
R586	1-247-807-31	CARBON	100	5%	1/4W	
R587	1-249-421-11	CARBON	2.2K	5%	1/4W	
R588	1-249-393-11	CARBON	10	5%	1/4W	F
R591	1-215-424-00	METAL	1.3K	1%	1/4W	
R592	1-215-428-00	METAL	2K	1%	1/4W	
R593	1-249-426-11	CARBON	5.6K	5%	1/4W	
R595	1-215-451-00	METAL	18K	1%	1/4W	
R596	1-215-459-00	METAL	39K	1%	1/4W	
R597	1-215-445-00	METAL	10K	1%	1/4W	
R598	1-215-459-00	METAL	39K	1%	1/4W	
R599	1-249-437-11	CARBON	47K	5%	1/4W	
R801	1-249-417-11	CARBON	1K	5%	1/4W	
R802	1-249-393-11	CARBON	10	5%	1/4W	F
R803	1-249-402-11	CARBON	56	5%	1/4W	F
R804	1-249-433-11	CARBON	22K	5%	1/4W	
R805	1-249-417-11	CARBON	1K	5%	1/4W	
R806	1-249-426-11	CARBON	5.6K	5%	1/4W	
R807	1-249-417-11	CARBON	1K	5%	1/4W	
R808	1-247-807-31	CARBON	100	5%	1/4W	
R809	1-249-429-11	CARBON	10K	5%	1/4W	
R810	1-249-429-11	CARBON	10K	5%	1/4W	
R811	1-249-393-11	CARBON	10	5%	1/4W	
R812	1-249-428-11	CARBON	8.2K	5%	1/4W	
R813	1-249-397-11	CARBON	22	5%	1/4W	F
R814	1-249-427-11	CARBON	6.8K	5%	1/4W	
R815	1-215-889-00	METAL OXIDE	330	5%	2W	F
R816	1-216-432-00	METAL OXIDE	820	5%	1W	F
R817	1-216-432-00	METAL OXIDE	820	5%	1W	F
R821	1-215-889-00	METAL OXIDE	330	5%	2W	F
R822	1-249-423-11	CARBON	3.3K	5%	1/4W	
R823	1-249-425-11	CARBON	4.7K	5%	1/4W	
R824	1-249-441-11	CARBON	100K	5%	1/4W	
R826 ⚠	1-215-431-91	METAL	2.7K	1%	1/4W	
R827	1-249-441-11	CARBON	100K	5%	1/4W	
R828	1-247-887-00	CARBON	220K	5%	1/4W	
R829	1-249-441-11	CARBON	100K	5%	1/4W	
R830	1-249-433-11	CARBON	22K	5%	1/4W	
R831	1-249-426-11	CARBON	5.6K	5%	1/4W	
R832 ⚠	1-215-455-91	METAL	27K	1%	1/4W	
R833	1-249-417-11	CARBON	1K	5%	1/4W	
R834	1-249-426-11	CARBON	5.6K	5%	1/4W	
R835	1-249-421-11	CARBON	2.2K	5%	1/4W	
R836	1-249-429-11	CARBON	10K	5%	1/4W	
R837	1-249-433-11	CARBON	22K	5%	1/4W	
R839	1-249-441-11	CARBON	100K	5%	1/4W	
R840	1-249-417-11	CARBON	1K	5%	1/4W	
R841	1-249-417-11	CARBON	1K	5%	1/4W	
R842 ⚠	1-215-453-91	METAL	22K	1%	1/4W	
R843 ⚠	1-215-448-91	METAL	13K	1%	1/4W	
R844	1-249-429-11	CARBON	10K	5%	1/4W	
R845	1-216-341-11	METAL OXIDE	0.22	5%	1W	F
R846	1-216-344-00	METAL OXIDE	0.39	5%	1W	F
R847	1-249-429-11	CARBON	10K	5%	1/4W	
R848	1-249-441-11	CARBON	100K	5%	1/4W	
R849	1-247-887-00	CARBON	220K	5%	1/4W	
R850	1-202-826-00	SOLID	4.7K	20%	1/2W	
R851	1-202-826-00	SOLID	4.7K	20%	1/2W	
R852	1-215-889-00	METAL OXIDE	330	5%	2W	F
R853	1-249-441-11	CARBON	100K	5%	1/4W	
R854	1-249-417-11	CARBON	1K	5%	1/4W	
R855	1-249-433-11	CARBON	22K	5%	1/4W	
R857	1-215-913-11	METAL OXIDE	220	5%	3W	F
R1500	1-249-425-11	CARBON	4.7K	5%	1/4W	
R1501	1-249-429-11	CARBON	10K	5%	1/4W	
R1502	1-215-445-00	METAL	10K	1%	1/4W	
R1503	1-249-417-11	CARBON	1K	5%	1/4W	
R1504	1-249-417-11	CARBON	1K	5%	1/4W	
R1505	1-249-417-11	CARBON	1K	5%	1/4W	
R1506	1-249-417-11	CARBON	1K	5%	1/4W	
R1507	1-249-437-11	CARBON	47K	5%	1/4W	
R1508	1-249-437-11	CARBON	47K	5%	1/4W	
R1509	1-249-437-11	CARBON	47K	5%	1/4W	
R1510	1-249-437-11	CARBON	47K	5%	1/4W	
R1511	1-215-449-00	METAL	15K	1%	1/4W	
R1512	1-247-807-31	CARBON	100	5%	1/4W	
R1518	1-214-847-00	METAL	200	1%	1/2W	
R1519	1-214-847-00	METAL	200	1%	1/2W	
R1520	1-249-417-11	CARBON	1K	5%	1/4W	
R1521	1-249-437-11	CARBON	47K	5%	1/4W	
R1522	1-214-847-00	METAL	200	1%	1/2W	
R1600	1-249-429-11	CARBON	10K	5%	1/4W	
R1603	1-249-429-11	CARBON	10K	5%	1/4W	
R1604	1-249-429-11	CARBON	10K	5%	1/4W	
R1605	1-249-417-11	CARBON	1K	5%	1/4W	
R1639	1-249-429-11	CARBON	10K	5%	1/4W	
R1646	1-249-435-11	CARBON	33K	5%	1/4W	
R1647	1-249-429-11	CARBON	10K	5%	1/4W	

<RELAY>

⚠RY501	1-515-805-11	RELAY, POWER
⚠RY1601	1-515-849-11	RELAY
⚠RY1602	1-515-669-21	RELAY

<SPARK GAP>

SG400	1-519-422-11	GAP, SPARK
SG800	1-519-422-11	GAP, SPARK

Les composants identifies par une trame et une marque ⚠ sont critiques pour la securite. Ne les remplacer que par une piece portant le numero specifie.

The components identified by shading and mark ⚠ are critical for safety. Replace only with part number specified.

D H N

REF.NO.	PART NO.	DESCRIPTION	REMARK
		<TRANSFOMER>	
T400	1-423-854-11	TRANSFORMER, FERRITE (DFT)	
T401	1-423-405-11	TRANSFORMER, FERRITE (FRT)	
T500	1-423-853-11	TRANSFORMER, FERRITE (HDT)	
T501	1-423-888-11	TRANSFORMER, FERRITE (HOT)	
T502	1-423-856-11	TRANSFORMER, FERRITE (HST)	
T800 ⚠	1-453-162-11	TRANSFORMER ASSY, FLYBACK (NX-2780A1)	
T801	1-423-855-11	TRANSFORMER, FERRITE (HRT)	
T1601⚠	1-426-643-11	TRANSFORMER, LINE FILTER (LFT)	
		<THERMISTOR>	
⚠THP601.	1-809-260-11	THERMISTOR, POWER	
⚠THP602.	1-809-827-11	THERMISTOR, POSITIVE	
		<VARISTOR>	
⚠VDR601.	1-809-201-21	VARISTOR	
		**********	
	8-934-705-00	CONTROL PANEL ASSY (H BOARD) **********	
	4-041-624-01	HOLDER (H1), LED	
	4-041-657-01	HOLDER (H2), LED	
		<CAPACITOR>	
C201	1-163-038-00	CERAMIC CHIP 0.1MF	25V
C202	1-163-038-00	CERAMIC CHIP 0.1MF	25V
C203	1-124-584-00	ELECT 100MF 20%	10V
C204	1-124-584-00	ELECT 100MF 20%	10V
C205	1-163-125-00	CERAMIC CHIP 220PF 5%	50V
C206	1-163-125-00	CERAMIC CHIP 220PF 5%	50V
C207	1-163-125-00	CERAMIC CHIP 220PF 5%	50V
C208	1-163-125-00	CERAMIC CHIP 220PF 5%	50V
C209	1-163-125-00	CERAMIC CHIP 220PF 5%	50V
C210	1-163-125-00	CERAMIC CHIP 220PF 5%	50V
C211	1-163-125-00	CERAMIC CHIP 220PF 5%	50V
C212	1-163-125-00	CERAMIC CHIP 220PF 5%	50V
C213	1-163-125-00	CERAMIC CHIP 220PF 5%	50V
C214	1-163-125-00	CERAMIC CHIP 220PF 5%	50V
C215	1-163-125-00	CERAMIC CHIP 220PF 5%	50V
C216	1-163-125-00	CERAMIC CHIP 220PF 5%	50V
		<CONNECTOR>	
CN201	*1-564-521-11	PLUG, CONNECTOR 6P	
		<DIODE>	
D201	8-719-311-15	DIODE SEL1422G-C,D	
D202	8-719-311-90	DIODE SEL1922D-C	
D203	8-719-311-90	DIODE SEL1922D-C	
D204	8-719-311-90	DIODE SEL1922D-C	
D205	8-719-311-90	DIODE SEL1922D-C	
D206	8-719-311-90	DIODE SEL1922D-C	
D207	8-719-045-19	DIODE SPB-26MVWF	
D209	8-719-977-03	DIODE DTZ5.6B	
		<IC>	
IC201	8-759-032-59	IC MC74HC595AF	
IC202	8-759-173-48	IC MC74HC597F-T2	
		<TRANSISTOR>	
Q201	8-729-901-00	TRANSISTOR DTC124EK	
Q202	8-729-901-00	TRANSISTOR DTC124EK	
		<RESISTOR>	
R201	1-216-041-00	METAL GLAZE 470 5%	1/10W
R202	1-216-041-00	METAL GLAZE 470 5%	1/10W
R203	1-216-041-00	METAL GLAZE 470 5%	1/10W
R204	1-216-041-00	METAL GLAZE 470 5%	1/10W
R205	1-216-041-00	METAL GLAZE 470 5%	1/10W
R206	1-216-041-00	METAL GLAZE 470 5%	1/10W
R207	1-216-037-00	METAL GLAZE 330 5%	1/10W
R208	1-216-041-00	METAL GLAZE 470 5%	1/10W
R210	1-216-041-00	METAL GLAZE 470 5%	1/10W
R226	1-216-073-00	METAL GLAZE 10K 5%	1/10W
R227	1-216-073-00	METAL GLAZE 10K 5%	1/10W
R228	1-216-073-00	METAL GLAZE 10K 5%	1/10W
R229	1-216-073-00	METAL GLAZE 10K 5%	1/10W
R230	1-216-073-00	METAL GLAZE 10K 5%	1/10W
R231	1-216-073-00	METAL GLAZE 10K 5%	1/10W
R232	1-216-073-00	METAL GLAZE 10K 5%	1/10W
R233	1-216-073-00	METAL GLAZE 10K 5%	1/10W
R234	1-216-073-00	METAL GLAZE 10K 5%	1/10W
R235	1-216-073-00	METAL GLAZE 10K 5%	1/10W
R236	1-216-073-00	METAL GLAZE 10K 5%	1/10W
R237	1-216-073-00	METAL GLAZE 10K 5%	1/10W
R238	1-216-073-00	METAL GLAZE 10K 5%	1/10W
R239	1-216-073-00	METAL GLAZE 10K 5%	1/10W
R240	1-216-073-00	METAL GLAZE 10K 5%	1/10W
R241	1-216-073-00	METAL GLAZE 10K 5%	1/10W
R242	1-216-073-00	METAL GLAZE 10K 5%	1/10W
R243	1-216-073-00	METAL GLAZE 10K 5%	1/10W
		<SWITCH>	
S201	1-571-532-21	SWITCH, TACTIL	
S202	1-571-532-21	SWITCH, TACTIL	
S203	1-571-532-21	SWITCH, TACTIL	
S204	1-571-532-21	SWITCH, TACTIL	
S205	1-571-532-21	SWITCH, TACTIL	
S206	1-571-532-21	SWITCH, TACTIL	
S207	1-571-532-21	SWITCH, TACTIL	
S208	1-571-532-21	SWITCH, TACTIL	
		**********	
	8-934-707-00	MICON MCB (N BOARD) **********	
		<CAPACITOR>	
C901	1-163-038-00	CERAMIC CHIP 0.1MF	25V
C903	1-163-038-00	CERAMIC CHIP 0.1MF	25V
C904	1-164-004-11	CERAMIC CHIP 0.1MF 10%	25V
C905	1-163-038-00	CERAMIC CHIP 0.1MF	25V
C906	1-164-004-11	CERAMIC CHIP 0.1MF 10%	25V
C907	1-124-903-11	ELECT 1MF 20%	50V
C908	1-163-235-11	CERAMIC CHIP 22PF 5%	50V
C909	1-130-479-00	MYLAR 0.0047MF 5%	50V
C910	1-163-235-11	CERAMIC CHIP 22PF 5%	50V
C911	1-163-235-11	CERAMIC CHIP 22PF 5%	50V

N

REF.NO.	PART NO.	DESCRIPTION			REMARK
C912	1-163-038-00	CERAMIC CHIP 0.1MF			25V
C913	1-163-038-00	CERAMIC CHIP 0.1MF			25V
C914	1-164-004-11	CERAMIC CHIP 0.1MF		10%	25V
C915	1-163-101-00	CERAMIC CHIP 22PF		5%	50V
C916	1-163-038-00	CERAMIC CHIP 0.1MF			25V
C917	1-163-038-00	CERAMIC CHIP 0.1MF			25V
C918	1-104-664-11	ELECT	47MF	20%	25V
C919	1-104-664-11	ELECT	47MF	20%	25V
C920	1-164-004-11	CERAMIC CHIP 0.1MF		10%	25V
C921	1-164-004-11	CERAMIC CHIP 0.1MF		10%	25V
C922	1-163-019-00	CERAMIC CHIP 0.0068MF		10%	50V
C930	1-163-038-00	CERAMIC CHIP 0.1MF			25V
C932	1-104-555-11	FILM CHIP	0.022MF	5%	16V
C933	1-163-117-00	CERAMIC CHIP 100PF		5%	50V
C934	1-104-561-11	FILM CHIP	0.068MF	5%	16V
C935	1-124-126-00	ELECT	47MF	20%	16V
C936	1-124-126-00	ELECT	47MF	20%	16V
C953	1-163-038-00	CERAMIC CHIP 0.1MF			25V
C954	1-164-004-11	CERAMIC CHIP 0.1MF		10%	25V
C958	1-104-664-11	ELECT	47MF	20%	25V
C959	1-163-038-00	CERAMIC CHIP 0.1MF			25V
C960	1-164-005-11	CERAMIC CHIP 0.47MF			25V
C963	1-164-004-11	CERAMIC CHIP 0.1MF		10%	25V
C964	1-164-004-11	CERAMIC CHIP 0.1MF		10%	25V
C965	1-164-004-11	CERAMIC CHIP 0.1MF		10%	25V
C966	1-164-004-11	CERAMIC CHIP 0.1MF		10%	25V
C967	1-164-004-11	CERAMIC CHIP 0.1MF		10%	25V
C968	1-164-004-11	CERAMIC CHIP 0.1MF		10%	25V
C969	1-163-038-00	CERAMIC CHIP 0.1MF			25V
C970	1-164-182-11	CERAMIC CHIP 0.0033MF		10%	50V
C971	1-163-038-00	CERAMIC CHIP 0.1MF			25V
C972	1-163-038-00	CERAMIC CHIP 0.1MF			25V
C973	1-126-966-11	ELECT	33MF	20%	16V
C974	1-164-004-11	CERAMIC CHIP 0.1MF		10%	25V
C976	1-163-117-00	CERAMIC CHIP 100PF		5%	50V
C977	1-104-539-11	FILM CHIP	0.001MF	5%	50V
C978	1-124-925-11	ELECT	2.2MF	20%	50V
C979	1-104-547-11	FILM CHIP	0.0047MF	5%	16V
C980	1-163-113-00	CERAMIC CHIP 68PF		5%	50V
C981	1-163-001-11	CERAMIC CHIP 220PF		10%	50V
C982	1-107-561-11	FILM CHIP	0.01MF	5%	50V
C983	1-124-126-00	ELECT	47MF	20%	16V
C984	1-104-664-11	ELECT	47MF	20%	25V
C985	1-163-038-00	CERAMIC CHIP 0.1MF			25V
C986	1-104-563-11	FILM CHIP	0.1MF	5%	16V
C987	1-164-232-11	CERAMIC CHIP 0.01MF		10%	50V
C988	1-124-126-00	ELECT	47MF	20%	16V
C989	1-104-563-11	FILM CHIP	0.1MF	5%	16V
C990	1-163-037-11	CERAMIC CHIP 0.022MF		10%	25V
C991	1-163-038-00	CERAMIC CHIP 0.1MF			25V
C992	1-163-038-00	CERAMIC CHIP 0.1MF			25V

<CONNECTOR>

CN901	*1-564-514-11	PLUG, CONNECTOR 11P
CN902	*1-564-510-11	PLUG, CONNECTOR 7P
CN907	*1-564-509-11	PLUG, CONNECTOR 6P
CN908	*1-564-508-11	PLUG, CONNECTOR 5P
CN909	*1-564-507-11	PLUG, CONNECTOR 4P
CN910	1-764-027-11	SOCKET, CONNECTOR 20P
CN911	1-764-027-11	SOCKET, CONNECTOR 20P

<DIODE>

REF.NO.	PART NO.	DESCRIPTION	REMARK
D901	8-719-404-46	DIODE MA110	
D902	8-719-404-46	DIODE MA110	
D903	8-719-800-76	DIODE 1SS226	
D904	8-719-800-76	DIODE 1SS226	
D905	8-719-404-46	DIODE MA110	
D906	8-719-404-46	DIODE MA110	
D907	8-719-404-46	DIODE MA110	
D908	8-719-404-46	DIODE MA110	
D909	8-719-404-46	DIODE MA110	
D910	8-719-404-46	DIODE MA110	
D911	8-719-800-76	DIODE 1SS226	
D912	8-719-800-76	DIODE 1SS226	
D913	8-719-800-76	DIODE 1SS226	
D914	8-719-800-76	DIODE 1SS226	
D915	8-719-800-76	DIODE 1SS226	
D917	8-719-404-46	DIODE MA110	
D920	8-719-404-46	DIODE MA110	

<FILTER>

FL951	1-236-071-11	ENCAPSULATED COMPONENT
FL956	1-236-071-11	ENCAPSULATED COMPONENT
FL957	1-236-071-11	ENCAPSULATED COMPONENT

<IC>

IC901	8-759-182-62	IC CXD8478Q
IC902	8-759-156-55	IC CD74HC4046AM
IC903	8-759-074-40	IC PST572DMT-T1
IC904	8-759-261-57	IC SC400646FU
IC905	8-759-189-89	IC SN751701PS-ELL2000
IC908	8-759-008-67	IC MC14066BF
IC909	8-759-981-48	IC TL082M
IC911	8-759-925-90	IC SN74HC74ANS
IC912	8-759-925-72	IC SN74HC02ANS
IC913	8-759-191-50	IC TDA9102C
IC914	8-759-981-48	IC TL082M

<COIL>

L905	1-412-537-31	INDUCTOR	100UH
L906	1-408-421-00	INDUCTOR	100UH
L907	1-408-421-00	INDUCTOR	100UH

<TRANSISTOR>

Q903	8-729-120-28	TRANSISTOR 2SC1623-L5L6
Q905	8-729-120-28	TRANSISTOR 2SC1623-L5L6
Q906	8-729-120-28	TRANSISTOR 2SC1623-L5L6
Q907	8-729-120-28	TRANSISTOR 2SC1623-L5L6
Q909	8-729-901-00	TRANSISTOR DTC124EK
Q910	8-729-232-13	TRANSISTOR 2SK1078
Q912	8-729-120-28	TRANSISTOR 2SC1623-L5L6

<RESISTOR>

R260	1-216-049-00	METAL GLAZE	1K	5%	1/10W
R261	1-216-049-00	METAL GLAZE	1K	5%	1/10W
R262	1-216-049-00	METAL GLAZE	1K	5%	1/10W
R265	1-216-669-11	METAL CHIP	5.6K	0.50%	1/10W
R266	1-216-659-11	METAL CHIP	2.2K	0.50%	1/10W
R269	1-216-049-00	METAL GLAZE	1K	5%	1/10W
R270	1-216-049-00	METAL GLAZE	1K	5%	1/10W

N

REF.NO.	PART NO.	DESCRIPTION				REMARK
R272	1-216-295-00	METAL GLAZE	0	5%	1/10W	
R280	1-216-041-00	METAL GLAZE	470	5%	1/10W	
R281	1-216-049-00	METAL GLAZE	1K	5%	1/10W	
R282	1-216-049-00	METAL GLAZE	1K	5%	1/10W	
R283	1-216-057-00	METAL GLAZE	2.2K	5%	1/10W	
R284	1-216-675-11	METAL CHIP	10K	0.50%	1/10W	
R285	1-216-041-00	METAL GLAZE	470	5%	1/10W	
R286	1-216-057-00	METAL GLAZE	2.2K	5%	1/10W	
R287	1-216-049-00	METAL GLAZE	1K	5%	1/10W	
R288	1-216-057-00	METAL GLAZE	2.2K	5%	1/10W	
R289	1-216-057-00	METAL GLAZE	2.2K	5%	1/10W	
R290	1-216-667-11	METAL CHIP	4.7K	0.50%	1/10W	
R291	1-216-651-11	METAL CHIP	1K	0.50%	1/10W	
R292	1-216-049-00	METAL GLAZE	1K	5%	1/10W	
R293	1-216-049-00	METAL GLAZE	1K	5%	1/10W	
R294	1-216-049-00	METAL GLAZE	1K	5%	1/10W	
R295	1-216-049-00	METAL GLAZE	1K	5%	1/10W	
R296	1-216-049-00	METAL GLAZE	1K	5%	1/10W	
R297	1-216-049-00	METAL GLAZE	1K	5%	1/10W	
R298	1-216-049-00	METAL GLAZE	1K	5%	1/10W	
R299	1-216-049-00	METAL GLAZE	1K	5%	1/10W	
R900	1-216-049-00	METAL GLAZE	1K	5%	1/10W	
R902	1-216-073-00	METAL GLAZE	10K	5%	1/10W	
R903	1-216-073-00	METAL GLAZE	10K	5%	1/10W	
R904	1-216-669-11	METAL CHIP	5.6K	0.50%	1/10W	
R905	1-216-049-00	METAL GLAZE	1K	5%	1/10W	
R906	1-216-682-11	METAL CHIP	20K	0.50%	1/10W	
R907	1-216-121-00	METAL GLAZE	1M	5%	1/10W	
R908	1-216-049-00	METAL GLAZE	1K	5%	1/10W	
R909	1-216-073-00	METAL GLAZE	10K	5%	1/10W	
R910	1-216-693-11	METAL CHIP	56K	0.50%	1/10W	
R911	1-216-627-11	METAL CHIP	100	0.50%	1/10W	
R912	1-216-659-11	METAL CHIP	2.2K	0.50%	1/10W	
R913	1-216-639-11	METAL CHIP	330	0.50%	1/10W	
R914	1-216-057-00	METAL GLAZE	2.2K	5%	1/10W	
R915	1-216-037-00	METAL GLAZE	330	5%	1/10W	
R916	1-216-069-00	METAL GLAZE	6.8K	5%	1/10W	
R917	1-216-061-00	METAL GLAZE	3.3K	5%	1/10W	
R918	1-216-687-11	METAL CHIP	33K	0.50%	1/10W	
R919	1-216-065-00	METAL GLAZE	4.7K	5%	1/10W	
R920	1-216-073-00	METAL GLAZE	10K	5%	1/10W	
R921	1-216-073-00	METAL GLAZE	10K	5%	1/10W	
R922	1-216-129-00	METAL GLAZE	2.2M	5%	1/10W	
R923	1-216-073-00	METAL GLAZE	10K	5%	1/10W	
R924	1-216-049-00	METAL GLAZE	1K	5%	1/10W	
R925	1-216-049-00	METAL GLAZE	1K	5%	1/10W	
R926	1-216-049-00	METAL GLAZE	1K	5%	1/10W	
R927	1-216-657-11	METAL CHIP	1.8K	0.50%	1/10W	
R928	1-216-695-11	METAL CHIP	68K	0.50%	1/10W	
R929	1-216-049-00	METAL GLAZE	1K	5%	1/10W	
R931	1-216-682-11	METAL CHIP	20K	0.50%	1/10W	
R933	1-216-097-00	METAL GLAZE	100K	5%	1/10W	
R934	1-216-057-00	METAL GLAZE	2.2K	5%	1/10W	
R935	1-216-067-00	METAL GLAZE	5.6K	5%	1/10W	
R936	1-216-097-00	METAL GLAZE	100K	5%	1/10W	
R937	1-216-657-11	METAL CHIP	1.8K	0.50%	1/10W	
R938	1-216-672-11	METAL CHIP	7.5K	0.50%	1/10W	
R939	1-216-693-11	METAL CHIP	56K	0.50%	1/10W	
R940	1-216-655-11	METAL CHIP	1.5K	0.50%	1/10W	
R941	1-216-671-11	METAL CHIP	6.8K	0.50%	1/10W	
R942	1-216-067-00	METAL GLAZE	5.6K	5%	1/10W	
R943	1-216-073-00	METAL GLAZE	10K	5%	1/10W	
R944	1-216-049-00	METAL GLAZE	1K	5%	1/10W	
R945	1-216-073-00	METAL GLAZE	10K	5%	1/10W	
R946	1-216-049-00	METAL GLAZE	1K	5%	1/10W	
R947	1-216-695-11	METAL CHIP	68K	0.50%	1/10W	
R948	1-216-057-00	METAL GLAZE	2.2K	5%	1/10W	
R949	1-216-659-11	METAL CHIP	2.2K	0.50%	1/10W	
R950	1-216-694-11	METAL CHIP	62K	0.50%	1/10W	
R951	1-216-049-00	METAL GLAZE	1K	5%	1/10W	
R952	1-216-057-00	METAL GLAZE	2.2K	5%	1/10W	
R953	1-216-659-11	METAL CHIP	2.2K	0.50%	1/10W	
R954	1-216-049-00	METAL GLAZE	1K	5%	1/10W	
R955	1-216-033-00	METAL GLAZE	220	5%	1/10W	
R956	1-216-697-11	METAL CHIP	82K	0.50%	1/10W	
R957	1-216-117-00	METAL GLAZE	680K	5%	1/10W	
R958	1-216-105-00	METAL GLAZE	220K	5%	1/10W	
R960	1-216-067-00	METAL GLAZE	5.6K	5%	1/10W	
R961	1-216-075-00	METAL GLAZE	12K	5%	1/10W	
R962	1-216-073-00	METAL GLAZE	10K	5%	1/10W	
R963	1-216-025-00	METAL GLAZE	100	5%	1/10W	
R964	1-215-403-00	METAL	180	1%	1/4W	
R965	1-216-075-00	METAL GLAZE	12K	5%	1/10W	
R966	1-216-117-00	METAL GLAZE	680K	5%	1/10W	
R967	1-216-689-11	METAL CHIP	39K	0.50%	1/10W	
R968	1-216-049-00	METAL GLAZE	1K	5%	1/10W	
R969	1-216-049-00	METAL GLAZE	1K	5%	1/10W	
R970	1-216-049-00	METAL GLAZE	1K	5%	1/10W	
R971	1-216-049-00	METAL GLAZE	1K	5%	1/10W	
R972	1-216-049-00	METAL GLAZE	1K	5%	1/10W	
R973	1-216-049-00	METAL GLAZE	1K	5%	1/10W	
R974	1-216-081-00	METAL GLAZE	22K	5%	1/10W	
R975	1-216-673-11	METAL CHIP	8.2K	0.50%	1/10W	
R976	1-216-669-11	METAL CHIP	5.6K	0.50%	1/10W	
R977	1-216-663-11	METAL CHIP	3.3K	0.50%	1/10W	
R978	1-216-659-11	METAL CHIP	2.2K	0.50%	1/10W	
R979	1-216-037-00	METAL GLAZE	330	5%	1/10W	
R980	1-216-041-00	METAL GLAZE	470	5%	1/10W	
R981	1-216-121-00	METAL GLAZE	1M	5%	1/10W	
R982	1-216-049-00	METAL GLAZE	1K	5%	1/10W	
R983	1-216-049-00	METAL GLAZE	1K	5%	1/10W	
R984	1-216-049-00	METAL GLAZE	1K	5%	1/10W	
R985	1-216-049-00	METAL GLAZE	1K	5%	1/10W	
R986	1-216-049-00	METAL GLAZE	1K	5%	1/10W	
R987	1-216-049-00	METAL GLAZE	1K	5%	1/10W	
R988	1-216-081-00	METAL GLAZE	22K	5%	1/10W	
R990	1-216-075-00	METAL GLAZE	12K	5%	1/10W	
R991	1-216-049-00	METAL GLAZE	1K	5%	1/10W	
R992	1-216-049-00	METAL GLAZE	1K	5%	1/10W	
R993	1-216-049-00	METAL GLAZE	1K	5%	1/10W	
R994	1-216-049-00	METAL GLAZE	1K	5%	1/10W	
R995	1-216-049-00	METAL GLAZE	1K	5%	1/10W	
R996	1-216-049-00	METAL GLAZE	1K	5%	1/10W	
R997	1-216-049-00	METAL GLAZE	1K	5%	1/10W	
R998	1-216-049-00	METAL GLAZE	1K	5%	1/10W	
R999	1-216-049-00	METAL GLAZE	1K	5%	1/10W	

<CRYSTAL>

X901	1-567-890-11	VIBRATOR, CRYSTAL

****

The components identified by shading and mark ⚠ are critical for safety.
Replace only with part number specified.

Les composants identifies par une trame et une marque ⚠ sont critiques pour la securite.
Ne les remplacer que par une piece portant le numero specifie.

REF.NO.	PART NO.	DESCRIPTION	REMARK
		MISCELLANEOUS **********	
	⚠.1-223-417-11	RESISTOR ASSY (HIGH-VOLTAGE)	
	⚠.1-251-141-11	INLET, AC (3P)	
	⚠.1-406-790-31	COIL, DEMAGNETIZATION	
	⚠.1-452-729-11	NECK ASSEMBLY (NA3011)	
	1-537-583-11	TERMINAL BOARD ASSY, I/O	
	1-900-048-40	CONNECTOR ASSY, MICRO 8P (SUB HARNESS)	
	1-900-076-09	CONNECTOR ASSY (MAIN HARNESS)	
V901	⚠.8-736-048-90	ITC ASSY (GDM-20E01T)	
	⚠.8-736-050-90	ITC ASSY	